LOCTITE®

Design Guide for

# ELECTRIC MOTORS AND GENERATORS

Henkel

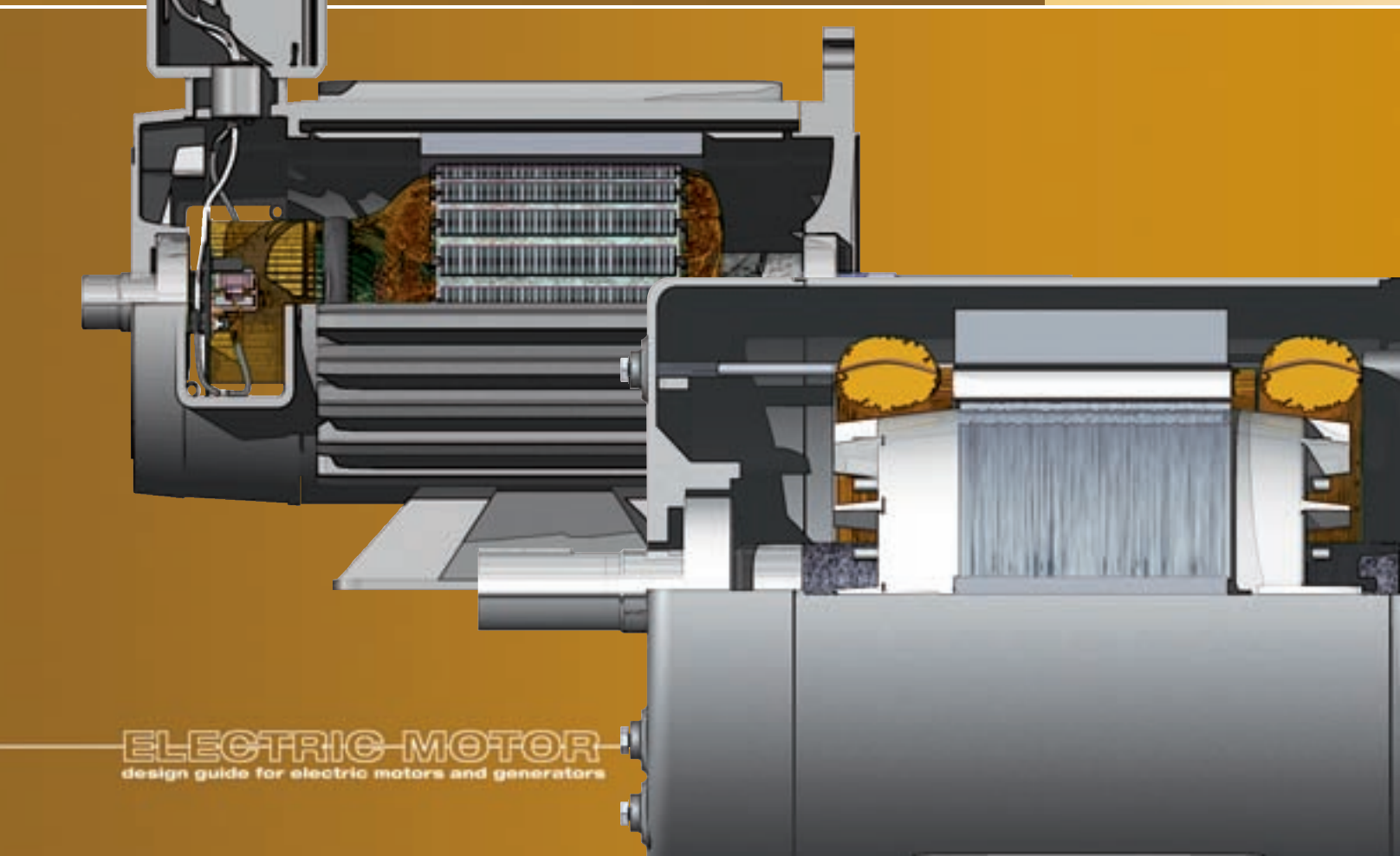

# TABLE OF CONTENTS

| TABLE OF CONTENTS | |
|---|---|
| **INTRODUCTION** | |
| **MOTOR CUTAWAYS** | |
| DC Motor | 2 |
| AC Motor | 4 |
| **APPLICATIONS** | |
| General Bonding | 6 |
| Magnet Bonding | 8 |
| Gasketing | 10 |
| Potting | 12 |
| Retaining | 14 |
| Tacking | 16 |
| Threadlocking | 18 |
| Thread Sealing | 20 |
| Wire Reinforcement | 22 |
| Surface Treatment | 24 |
| **PRODUCT SELECTOR** | 26 |

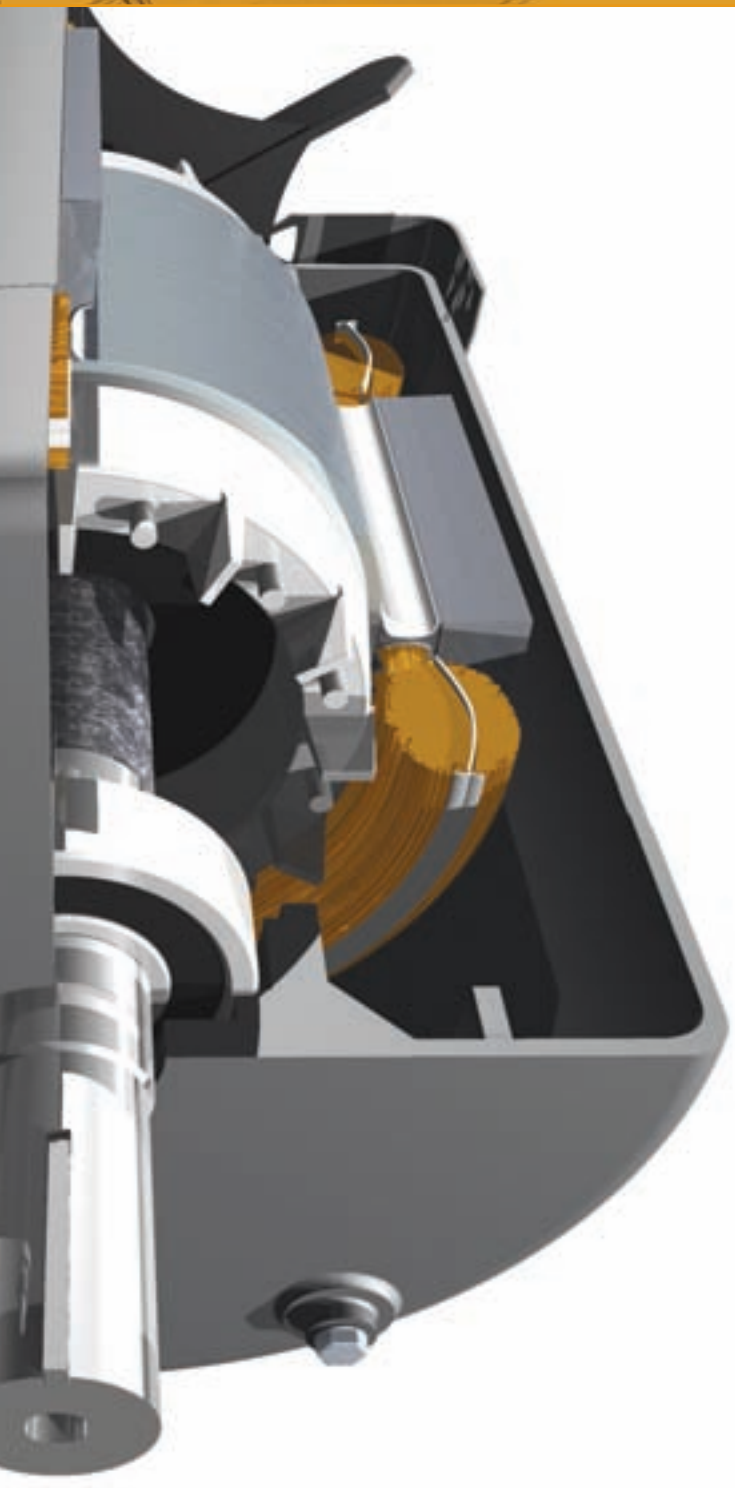

## INTRODUCTION

Electric motor and generator manufacturers have used Loctite® brand products to improve performance, to facilitate manufacturing processes, and to reduce costs for more than 40 years. While almost all manufacturers use adhesives and sealants in some assembly operations, very few manufacturers have developed the experience to take full advantage of the benefits that adhesives and sealants can offer. The objective of this design guide is to educate design, manufacturing, and quality engineers on where and why adhesives and sealants are commonly used on motors and generators to help them recognize the full potential of these products.

***To accomplish this, the following key areas are reviewed in this design guide:***

***Typical Applications*** A detailed review of the common applications of adhesives and sealants on motors and generators. This includes illustrations, an overview, a comparison of the adhesive technologies suitable for that application, and a product selector guide.

***Product Selector*** One table that summarizes all the adhesives and sealants that are most commonly used on electric motors.

# ELECTRIC MOTOR

## dc motor cutaway

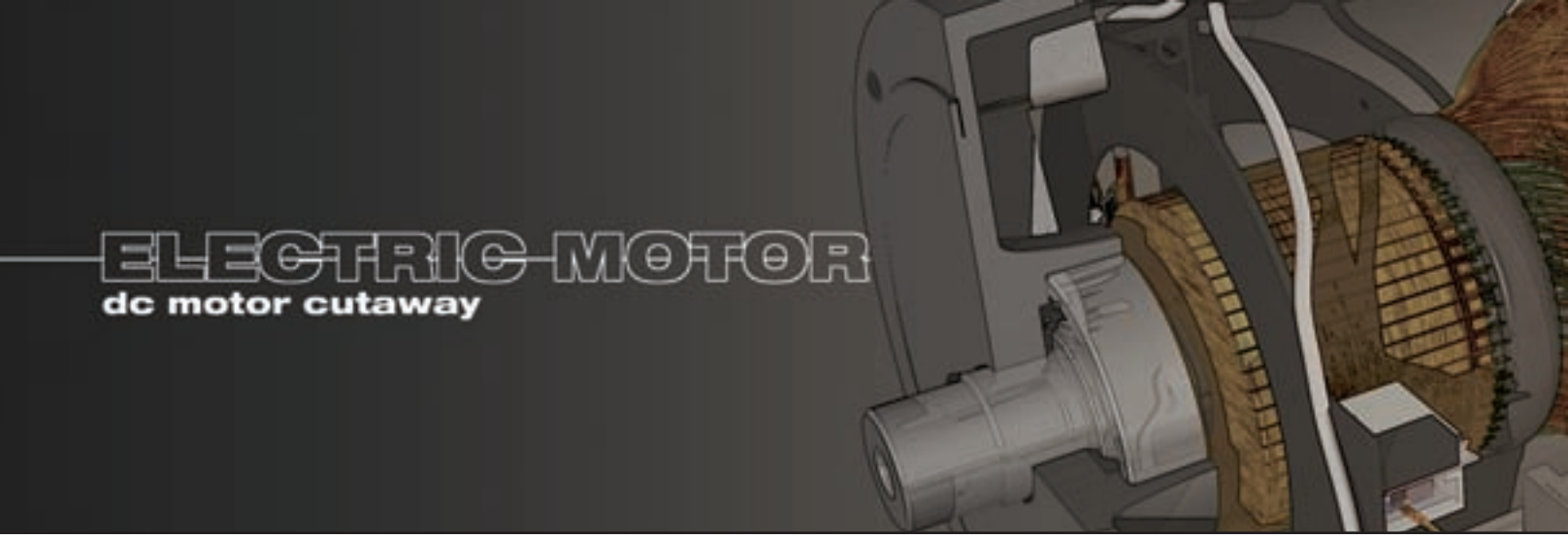

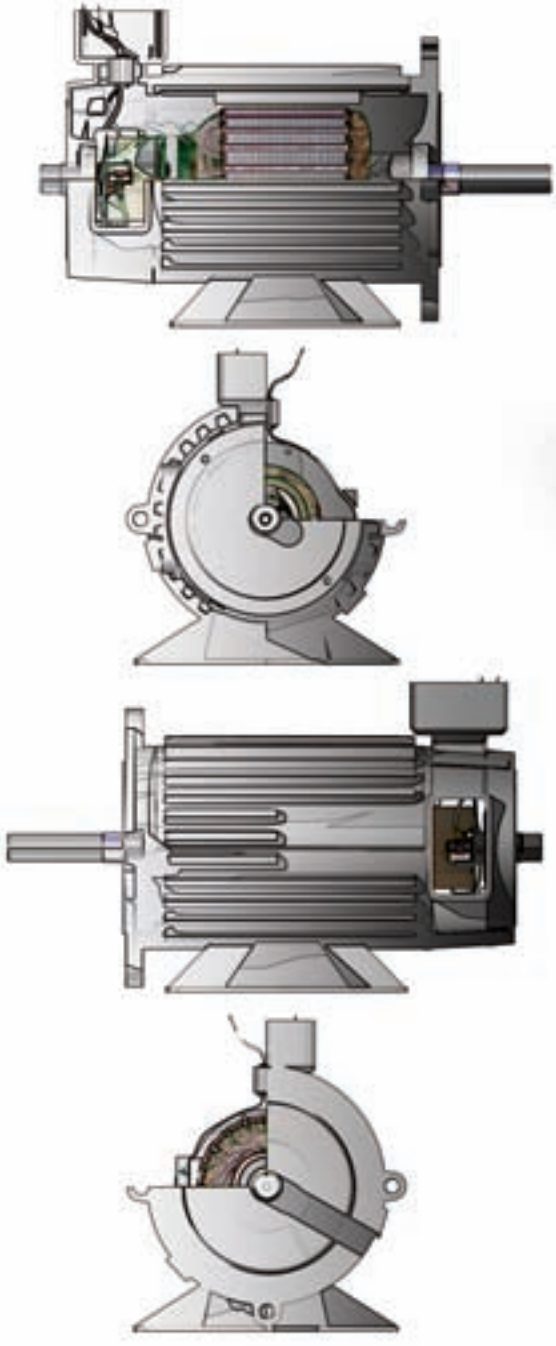

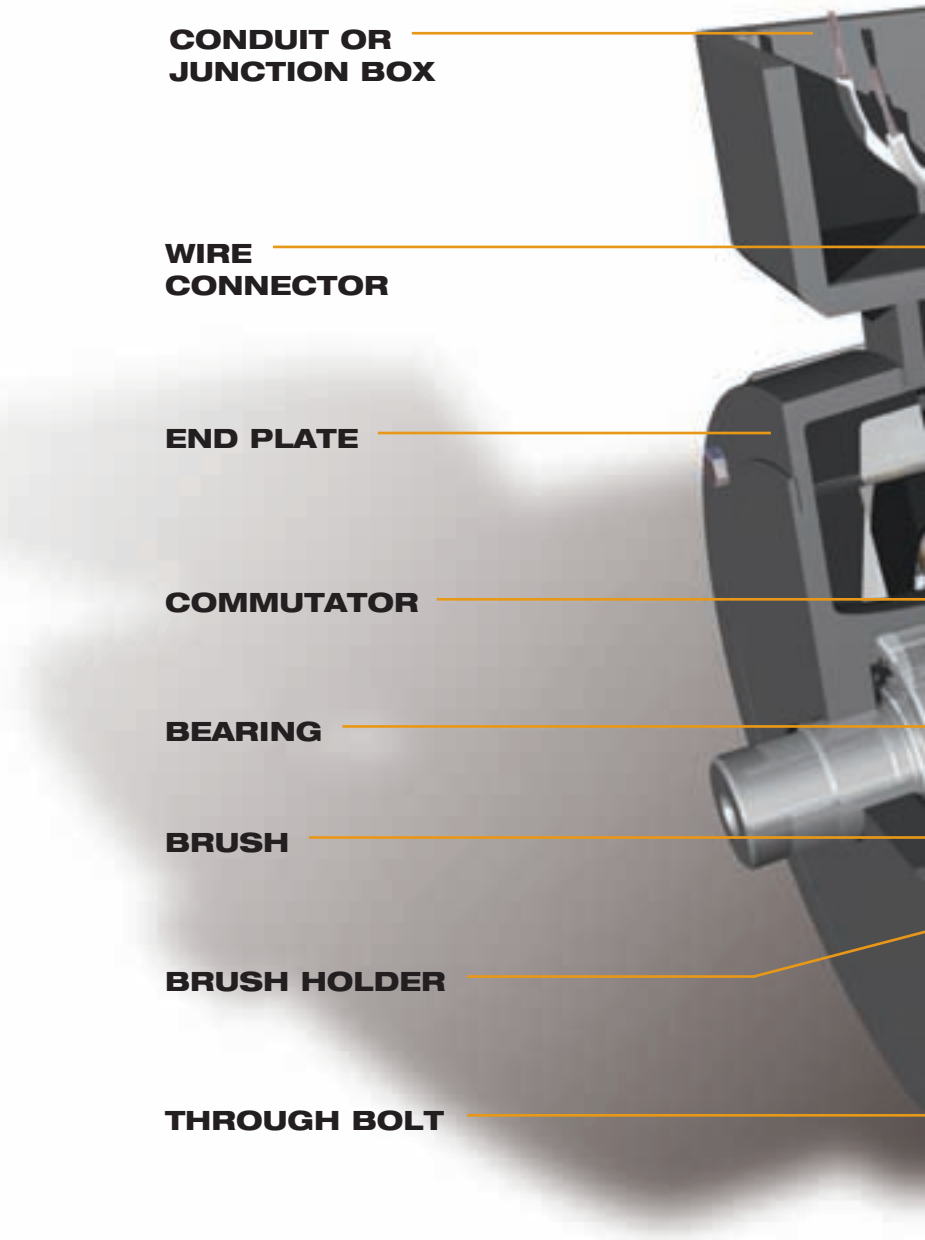

# DC MOTOR CUTAWAY

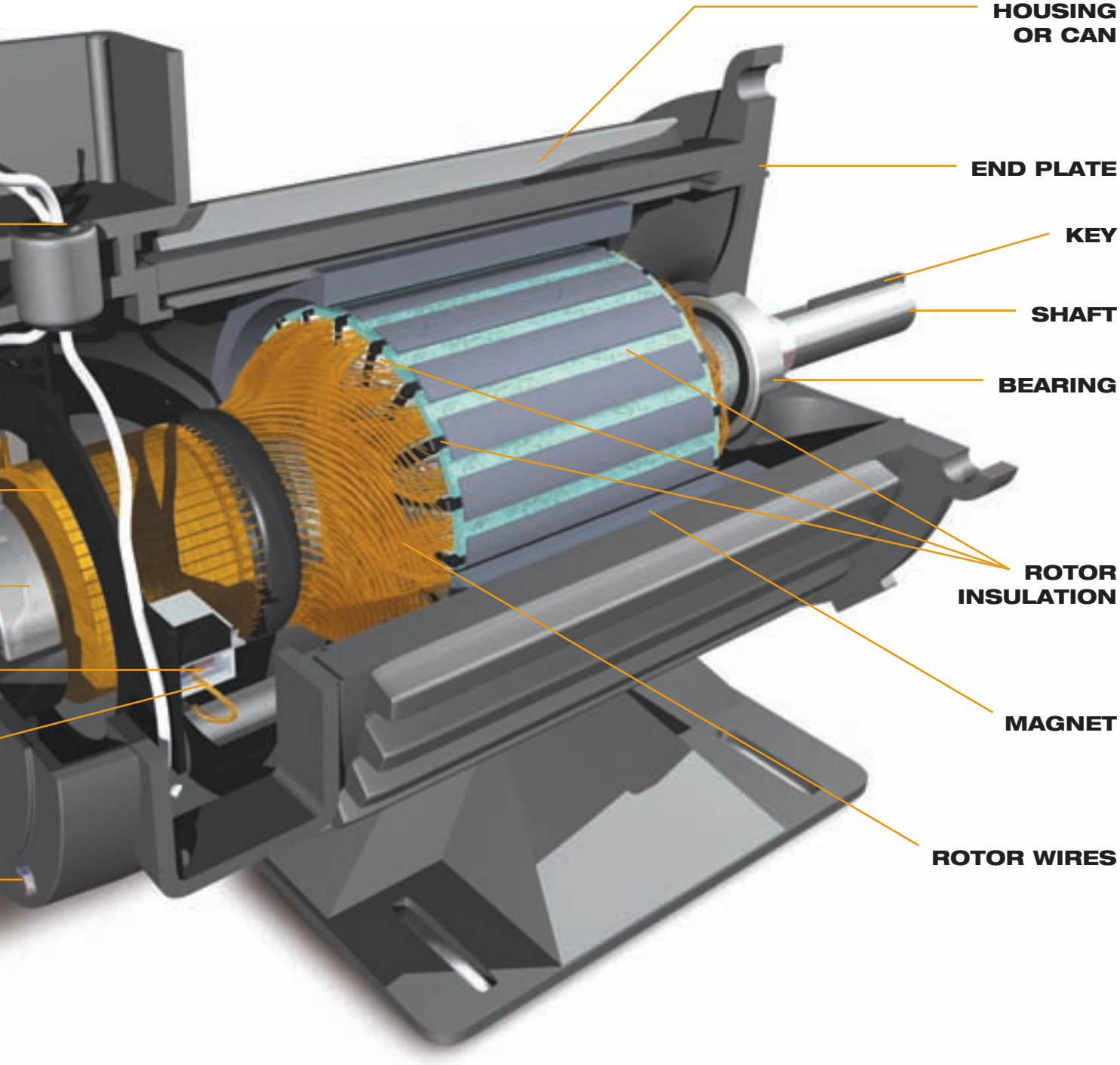

# ELECTRIC MOTOR

## ac motor cutaway

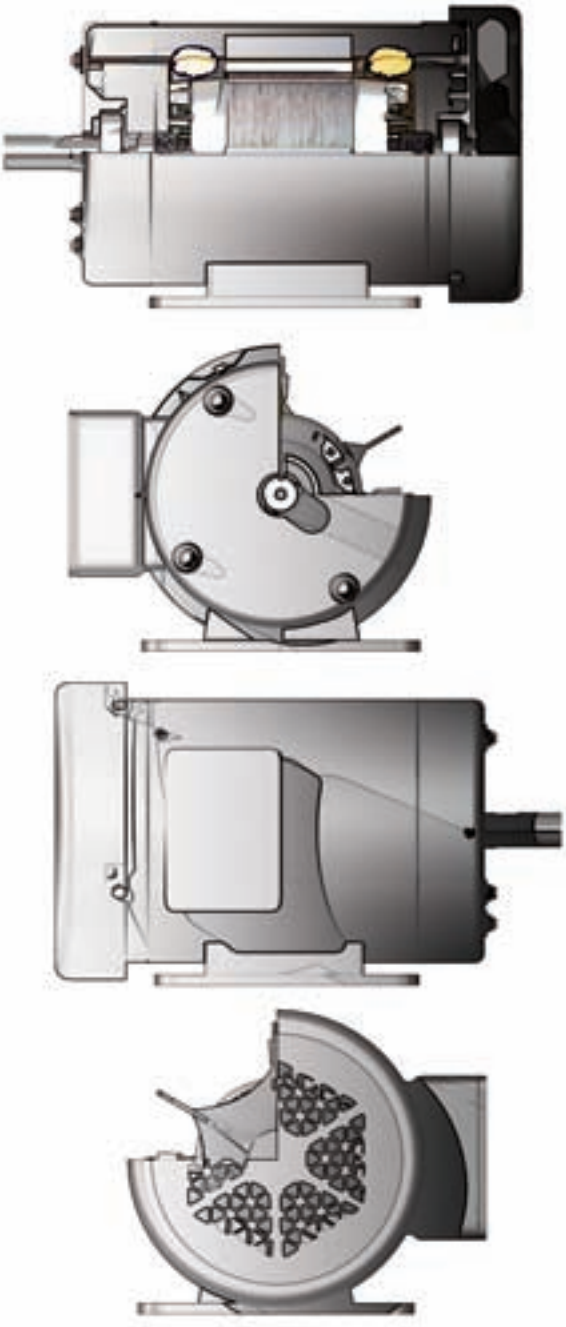

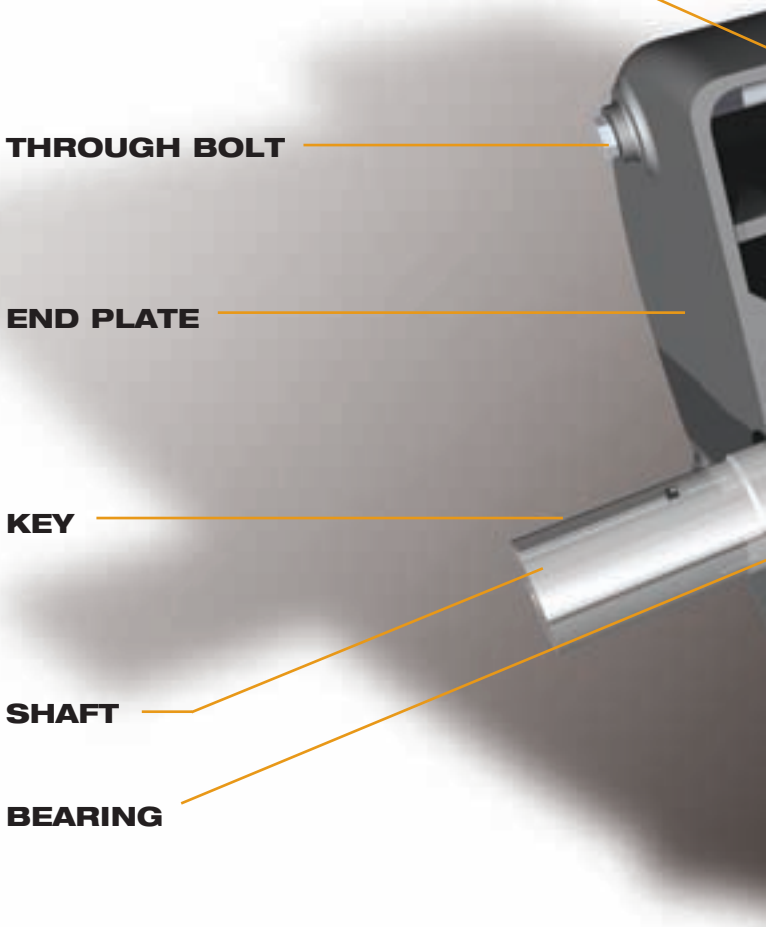

# AC MOTOR CUTAWAY

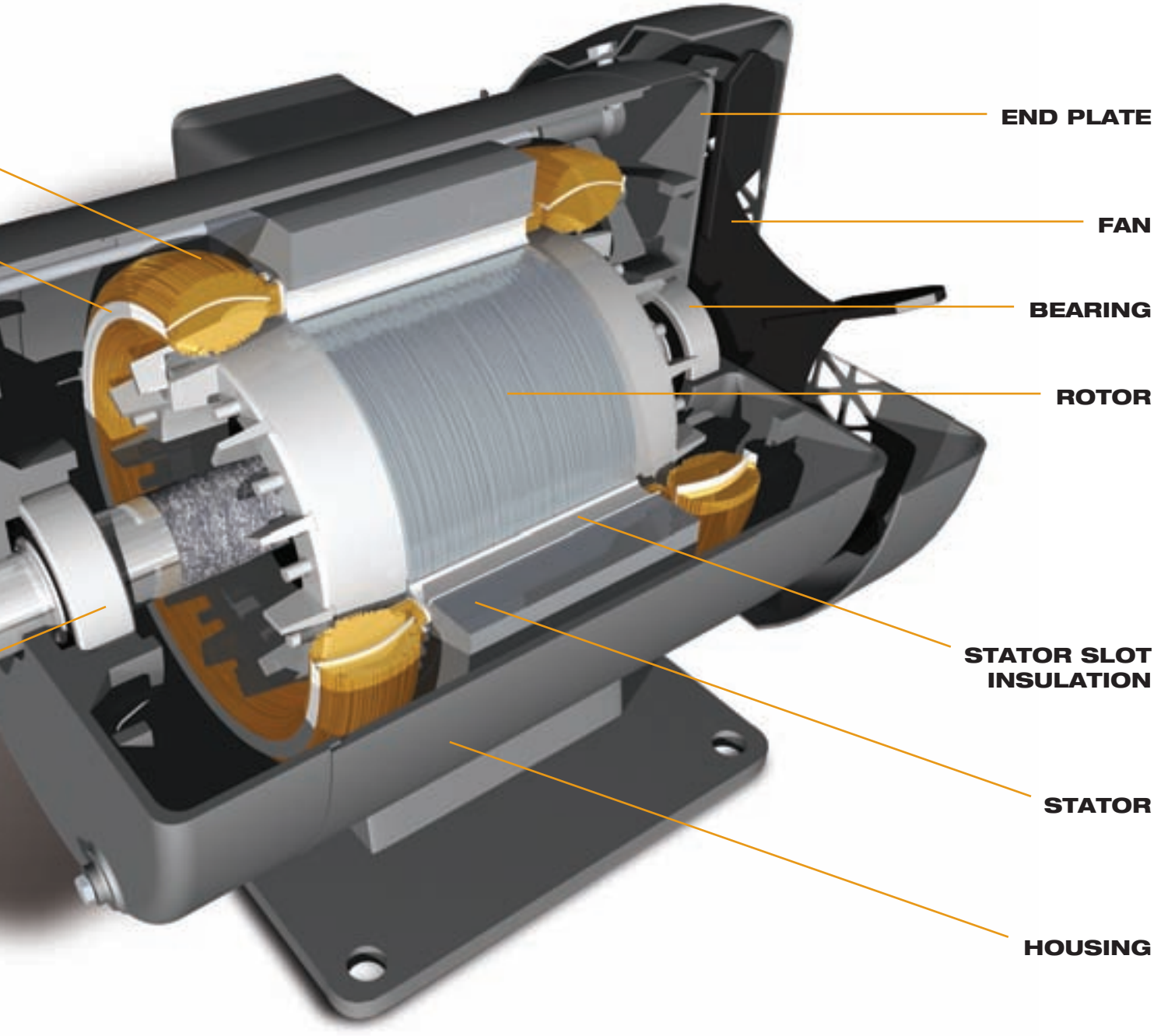

# ELECTRIC MOTOR
## general bonding applications

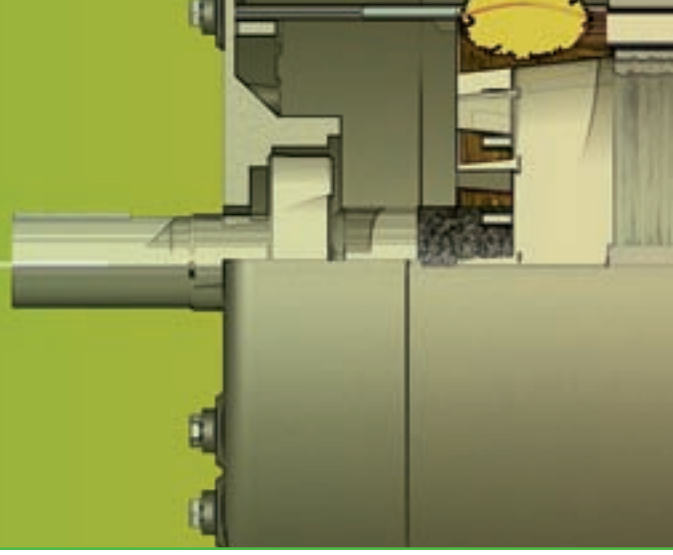

## TYPICAL APPLICATIONS

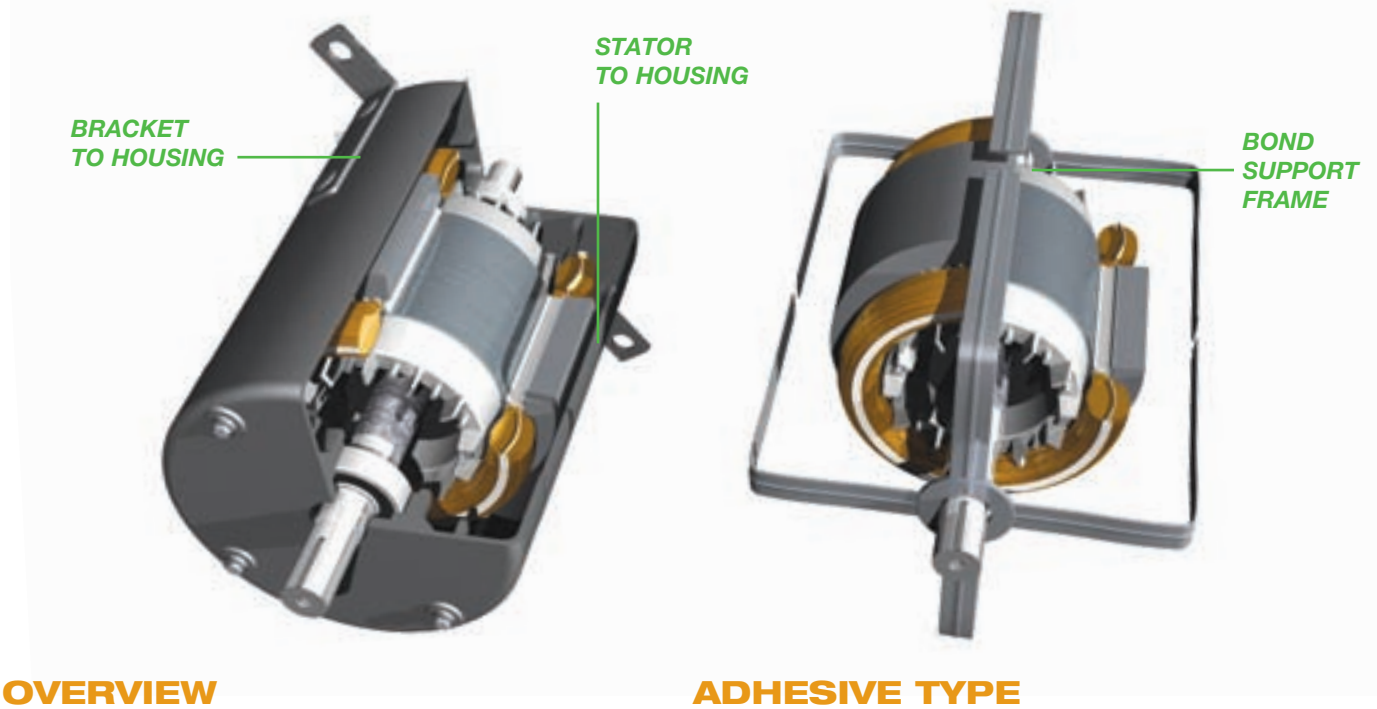


## OVERVIEW

General bonding applications are usually characterized by the use of an adhesive as the sole means of structurally joining two parts that have a relatively small gap between them, typically 0.002" to 0.10". Adhesives are widely used for bonding applications instead of welding, soldering, ultrasonic welding, riveting, mechanical fasteners, or tapes.

***The key benefits of adhesives over these alternative methods are:***

- Lower cost
- Easily automated
- Stresses evenly distributed
- Better cosmetic appearance
- Dissimilar substrates bonded

## ADHESIVE TYPE COMPARISON

There is a wide variety of adhesives that can be used for general bonding applications. The key selection criteria involves, but is not limited to, the following adhesive properties:

- Cure speed
- Temperature/environmental resistance
- Cost
- Adhesion to substrates
- Processing requirements (dispensing and curing)

***Table 1*** compares and contrasts the most commonly used types of adhesives for bonding.

# GENERAL BONDING



## TABLE 1. COMPARISON OF ADHESIVE TYPES FOR GENERAL BONDING

| ATTRIBUTE | | ACRYLIC, TWO-STEP | ACRYLIC, TWO-PART | CYANOACRYLATE | EPOXY / POLYURETHANE, TWO-PART | HOT MELT | EPOXY, HEAT CURE, ONE-PART | ELASTOMERIC BONDING |
|---|---|---|---|---|---|---|---|---|
| **OVERVIEW** | | | | | | | | |
| **Key Benefits** | | • Fast fixture speed<br>• No mixing<br>• Long open time<br>• High impact strength<br>• Acid-free<br>• Excellent temperature resistance | • High gap fill<br>• Structural strengths<br>• High impact strength<br>• Able to cut through surface contaminants | • Fast fixture speed<br>• High adhesion to most materials<br>• Light cure available | • Room temperature cure<br>• High gap fill<br>• Excellent temperature resistance<br>• Wide variety of formulations | • Fast fixture speed<br>• Low volumetric cost<br>• Many types of hot melts offer a wide range of performance | • Excellent strength on metals<br>• High toughness<br>• High temperature<br>• High chemical resistance<br>• One-part | • High gap filling<br>• Improved strength over silicones<br>• No primer needed<br>• Isocyanate-free<br>• Solvent-free<br>• Paintable |
| **Key Considerations** | | • Separate dispensing of activator<br>• Some activators contain solvents<br>• Fully cured in 24 hours | • Long cure time<br>• Will cure in mix tip during idle times<br>• May have strong odor<br>• May have flammable vapors | • Limited gap fill<br>• Low temperature resistance<br>• Durability may be affected by substrate corrosion | • Long cure times<br>• Adhesive cures in mix tip<br>• Limited adhesion to plastics and elastomers<br>• Equipment needed for bulk dispensing | • May have poor adhesion to metals<br>• Dispensing equipment required<br>• Hot dispense point can be a safety concern | • Requires heat to cure<br>• Requires ovens or induction curing equipment | • Limited temperature<br>• Performance<br>• Moderate cohesive strength |
| **PERFORMANCE** | | | | | | | | |
| **Adhesive to Substrates** | **Metals** | Excellent | Excellent | Very Good | Excellent | Good | Excellent | Good |
| | **Plastics** | Fair | Very Good | Excellent | Fair | Very Good | Good | Fair |
| | **Paper** | Excellent | Excellent | Excellent | Excellent | Excellent | Excellent | Good |
| **Gap Fill** | **Ideal** | 0.002" to 0.004" | 0.004" to 0.006" | 0.001" to 0.003" | 0.004" to 0.006" | 0.002" to 0.005" | 0.002" to 0.004" | 0.001" to 0.125" |
| | **Max.** | 0.040" | >0.50" | 0.010" | >0.50" | 0.25" | 0.49" | 0.24" |
| **Temperature Resistance** | **Typical Range** | -65°F to 300°F (-54°C to 149°C) | -65°F to 300°F (-54°C to 149°C) | -65°F to 180°F (-54°C to 82°C) | -65°F to 300°F (-54°C to 149°C) | -65°F to 250°F (-54°C to 121°C) | -65°F to 302°F (-54°C to 150°C) | -40°F to 199°F (-40°C to 93°C) |
| | **Max.** | 400°F (204°C) | 400°F (204°C) | 250°F (121°C) | 400°F (204°C) | 330°F (165°C) | 302°F (150°C) | 199°F (93°C) |
| **PROCESSING** | | | | | | | | |
| **Fixture Time** | **Average** | 30 to 60 seconds | 15 to 30 minutes | 20 to 30 seconds | 20 to 30 minutes | 30 seconds | 1 to 2 hours @ 120°C | 15 to 30 minutes |
| | **Fastest** | 15 to 30 seconds | 3 to 5 minutes | 5 to 10 seconds | 3 to 5 minutes | 5 to 10 seconds | 60 seconds (induction) | 5 minutes |
| **Full Cure** | | 24 hours | 24 hours | 24 hours | 24 hours | 24 hours | 1 to 2 hours @ 120°C | 1 to 7 days |
| **Equipment Required** | | No | Two-part dispensing | No | Two-part dispensing | Hot melt dispenser | Oven or induction curing | One-part cartridge dispense gun |
| **LOCTITE® BRAND PRODUCTS** | | • 331™ – Acid-Free | • H4500™ – Metal Bonding<br>• H8000™ – High Impact<br>• H8600™ – Severe Environment | • 4311™ – Toughened, UV Cure<br>• 4203™ – Low Viscosity, Toughened, High Temperature<br>• 4204™ – Mid-Viscosity, Toughened, High Temperature• 4205™ – Gel, Toughened, High Temperature | • E-20HP™ – High Impact<br>• E-05MR™ – Fast, Moisture Resistant<br>• E-40HT™ – High Temperature<br>• E-30UT™ – Ultra Tough<br>• U-05FL™ – Fast, High Strength | • 7804FRM-HV™ – Flame Retardant<br>• 3631™ – High Strength PUR<br>• 0450™ – Extended Open Time<br>• 7901™ – Potting | • E-214HP™ – Toughened, High Adhesion<br>• E-220IC™ – Induction Cure for Fast Throughput | • Terostat® MS 939™ – High Elongation and Strength<br>• 5512™ – High Elongation and Strength |

*For additional information on the Loctite® products listed, please refer to the product selector in the back of this guide or visit www.loctite.com/datasheets.*

# ELECTRIC MOTOR
## magnet bonding applications

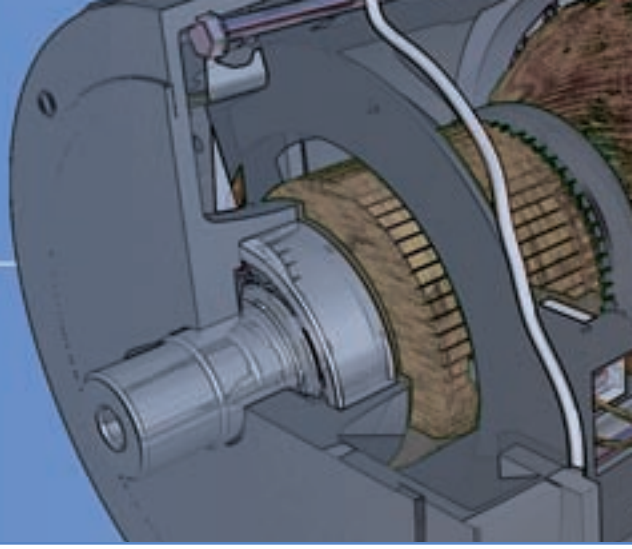

## TYPICAL APPLICATIONS

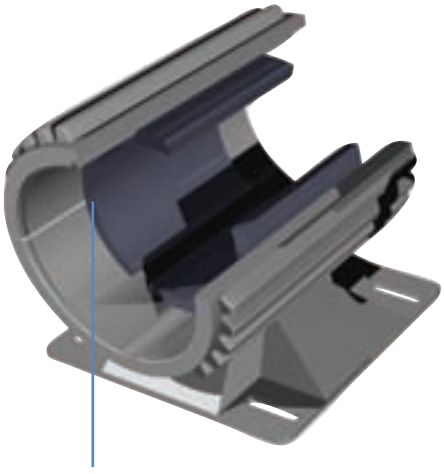

*MAGNET SEGMENTS TO HOUSING*

*RING MAGNETS TO ROTOR*

*MAGNET SEGMENTS TO ROTOR*

## OVERVIEW

Magnets in electric motors are almost exclusively assembled today using adhesives. While a handful of different adhesive technologies are employed to meet the unique challenges of each specific motor's performance and processing requirements, it is widely accepted that adhesives create a higher quality joint at a lower cost than mechanical fasteners such as clips and bolts.

***The key benefits of adhesives over clips and bolts are:***

- Lower cost components
- Decreased inventory cost
- Easier to automate
- Will not chip magnets
- Prevent vibrational noise
- Prevent corrosion

## ADHESIVE TYPE COMPARISON

In general, any of these adhesives can achieve bond strengths that exceed the tensile or compressive strength of the magnet. As a result, the key performance attributes that typically differentiate these adhesive types are:

- Cure speed
- Gap fill
- Temperature resistance
- Impact strength

***Table 2*** compares and contrasts the most commonly used types of adhesives for magnet bonding.

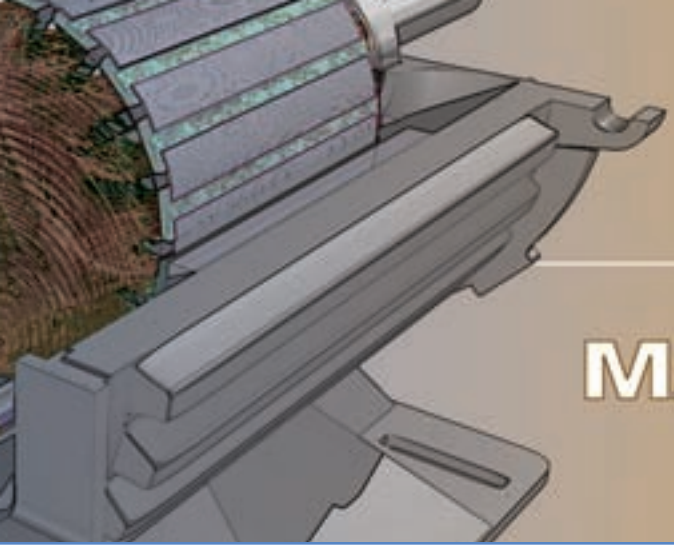

# MAGNET BONDING



## TABLE 2. COMPARISON OF ADHESIVE TYPES FOR BONDING MAGNETS

| ATTRIBUTE | | ACRYLIC, TWO-STEP | ACRYLIC, EXTERNAL MIX | EPOXY, ONE-PART HEAT CURE | EPOXY, ONE-PART INDUCTION CURE |
|---|---|---|---|---|---|
| **OVERVIEW** | | | | | |
| Key Benefits | | • Fast fixture speed<br>• Long open time<br>• No mixing<br>• High impact strength<br>• Excellent temperature resistance<br>• Acid-free | • Fast fixture speed<br>• No liquid activator<br>• No static mix tips<br>• Single step<br>• Good gap fill<br>• Acid-free<br>• Robust mix ration | • Single component<br>• High gap fill<br>• Excellent temperature resistance<br>• Fully cured in one hour<br>• Acid-free | • Single component<br>• High gap fill<br>• Excellent temperature resistance<br>• Fully cured in one minute<br>• Acid-free |
| Key Considerations | | • Some activators contain solvents<br>• Fully cured in 24 hours<br>• Separate dispensing of activator | • 60- to 90-second open time<br>• Dispense location difficult to control on small magnets<br>• Fully cured in 24 hours<br>• External mix valve equipment required | • Must allow parts to cool<br>• Curing equipment required | • Must allow parts to cool<br>• Curing equipment with part-specific coils required |
| **PERFORMANCE** | | | | | |
| Gap Fill | Ideal | 0.002" to 0.004" | 0.002" to 0.006" | 0.004" to 0.006" | 0.004" to 0.006" |
| | Maximum | 0.040" | 0.200" | >0.50" | >0.50" |
| Temperature Resistance | Typical Range | -65°F to 300°F (-54°C to 149°C) | -65°F to 310°F (-54°C to 155°C) | -65°F to 350°F (-54°C to 176°C) | -65°F to 350°F (-54°C to 176°C) |
| | Maximum | 400°F (204°C) | 310°F (155°C) | 400°F (204°C) | 400°F (204°C) |
| Impact Strength (Steel) | | Excellent | Excellent | Good | Good |
| **PROCESSING** | | | | | |
| Fixture Time | Average | 30 to 60 seconds | 1 to 10 minutes | 30 to 45 minutes | 30 to 60 seconds |
| | Fastest | 15 to 30 seconds | 30 to 60 seconds | 15 to 30 minutes | 30 seconds |
| Full Cure | | 24 hours | 24 hours | 1 hour | Permanent upon cooling |
| **LOCTITE® BRAND PRODUCTS** | | • 331™ – Acid-Free<br>• 392™ – High Impact<br>• 334™ – High Moisture Resistance | • 3060™ – General-Purpose<br>• A-671™ – Humidity Resistance<br>• A-6750™ – Large Gap Fill | • E-214HP™ – High Strength | • E-220IC™ – General-Purpose* |

*For additional information on the Loctite® products listed, please refer to the product selector in the back of this guide or visit www.loctite.com/datasheets.*

* Can be used with stainless steel and aluminum but will require additional induction time to achieve the required temperature profile.

# ELECTRIC MOTOR
## gasketing applications

## TYPICAL APPLICATIONS

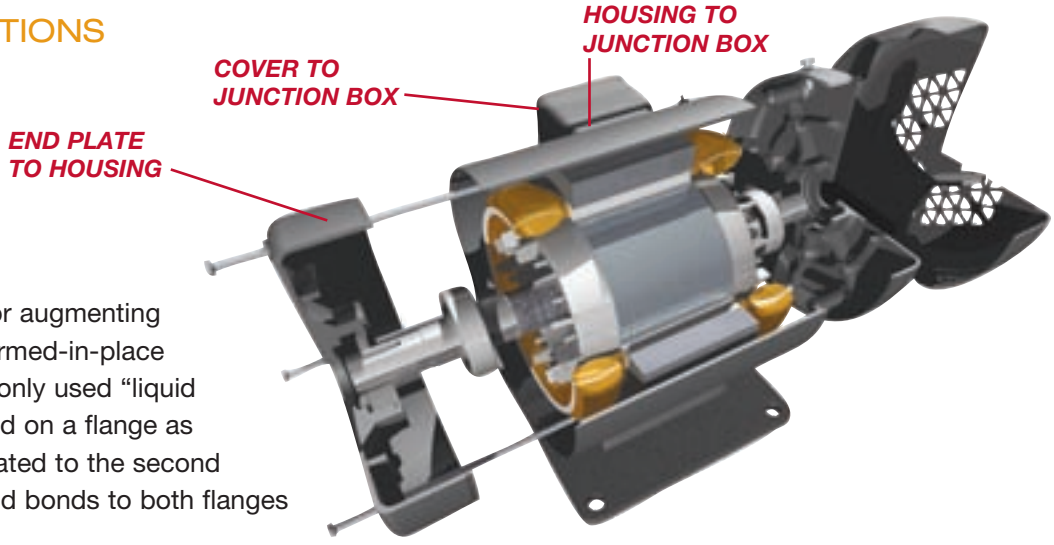


## OVERVIEW

Henkel has been replacing or augmenting cut gaskets for decades. Formed-in-place gaskets are the most commonly used "liquid gaskets." They are dispensed on a flange as liquid. When the flange is mated to the second flange, the liquid hardens and bonds to both flanges forming a seal.

***They offer the following benefits over cut gaskets, molded gaskets, and o-rings:***

- Easy to automate
- No misaligned gaskets
- One adhesive can seal many different flange configurations
- Lower inventory costs
- Lower labor costs
- Lower machining costs
- No gasket creep
- No gasket compression set

When it is necessary to service the gasketed assembly, cured-in-place gaskets can be used. They are robotically dispensed on a flange as a liquid and cured with light or heat. The cured gasket forms a compression gasket that is bonded to one flange. Cured-in-place gaskets share all the same benefits as formed-in-place gaskets, with the exception that cured-in-place gaskets are susceptible to compression set.

## ADHESIVE TYPE COMPARISON

Formed-in-place gaskets can be created with anaerobic or silicone adhesives and are well-suited for manual, semi-automated, and fully automated processes. Anaerobic gaskets are generally used on rigid metal flanges. Silicones are better suited for flexible joints with higher gaps.

When comparing the light cure and heat cure silicones for cured-in-place gaskets, the light cure silicones have the shortest cure time and the least work-in-process, while the heat cure silicones offer higher adhesion, better thermal and chemical resistance, and lower volumetric cost.

***Table 3*** compares and contrasts the most commonly used types of adhesives for gasketing.

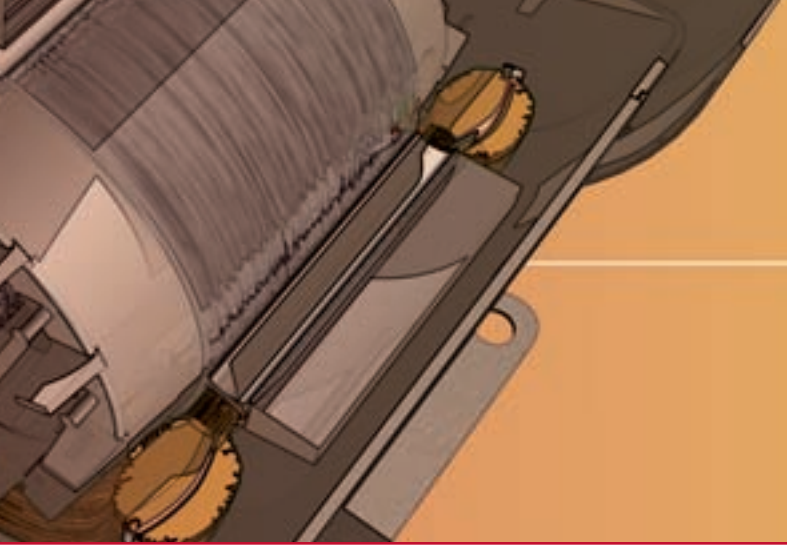

# GASKETING



## TABLE 3. COMPARISON OF ADHESIVE TYPES FOR GASKETING

| ATTRIBUTE | | FORMED-IN-PLACE | | CURED-IN-PLACE | | |
|---|---|---|---|---|---|---|
| | | ANAEROBIC | SILICONE, RTV | SILICONE, LIGHT CURE | SILICONE, HEAT CURE | SILICONE, TWO-PART |
| **OVERVIEW** | | | | | | |
| Key Benefits | | • No compression set<br>• Adds structural strength<br>• High pressure seal | • No compression set<br>• High joint movement<br>• High gap fill<br>• High temperature resistance | • Serviceable<br>• Fastest cure time<br>• Immediate properties<br>• High gap fill | • Serviceable<br>• Excellent temperature resistance<br>• Excellent adhesion<br>• High gap fill | • Fast room temperature cure<br>• Oil resistant<br>• High adhesion<br>• Noncorrosive |
| Key Considerations | | • Metal flanges only<br>• Rigid flanges only | • Limited open time<br>• Not for high pressure applications | • Must have dispensing and curing equipment<br>• Not for high pressure applications | • Must have dispensing and curing equipment<br>• Not for high pressure applications | • Two-component<br>• Short static mix nozzle life<br>• Requires two-part dispense equipment |
| **PERFORMANCE** | | | | | | |
| Flange Type | | Rigid | Rigid or Flexible | Rigid or Flexible | Rigid or Flexible | Rigid or Flexible |
| Suitable for Use With | Metals | Yes | Yes | Yes | Yes | Yes |
| | Plastics | No | Yes | Yes | Yes | Yes |
| Gap Fill | Ideal | 0.001" to 0.005" | 0.004" to 0.006" | 0.020" to 0.060" | 0.020" to 0.060" | 0.002" to 0.006" |
| | Maximum | 0.020" | 0.25" | 0.125" | 0.125" | 0.24" |
| Temperature Resistance | Typical Range | -65°F to 300°F (-54°C to 149°C) | -65°F to 400°F (-54°C to 204°C) | -65°F to 350°F (-54°C to 176°C) | -65°F to 400°F (-54°C to 204°C) | -40°F to 450°F (-40°C to 232°C) |
| | Maximum | 400°F (204°C) | 600°F (315°C) | 400°F (204°C) | 600°F (315°C) | 450°F (232°C) |
| **PROCESSING** | | | | | | |
| Cure Speed | Initial Cure | 15 to 30 minutes | 15 to 30 minutes | 15 to 30 seconds | 15 to 30 minutes | <10 minutes |
| | Full Cure | 24 hours | 24 hours to 7 days | 24 hours to 7 days | 15 to 30 minutes | 24 hours |
| Manual Dispensing | | Yes | Yes | No | No | No |
| **LOCTITE® BRAND PRODUCTS** | | • 518™ – General-Purpose<br>• 510™ – High Temperature<br>• 509™ – Flexible<br>• 574™ – High Gap<br>• 573™ – Extended Open Time | • 5910™ – General-Purpose<br>• 5900™ – Instant Seal<br>• 5699™ – High Durometer<br>• 5920™ – High Temperature | • 5050™ – General-Purpose<br>• 5039™ – Dual Cure<br>• 5950™ – Fast Cure / Black<br>• 5951™ – Fast Cure / Clear | • 5964™ – General-Purpose<br>• 5963™ – High Durometer | • 5613™ – Oil-Resistant |

*For additional information on the Loctite® products listed, please refer to the product selector in the back of this guide or visit www.loctite.com/datasheets.*

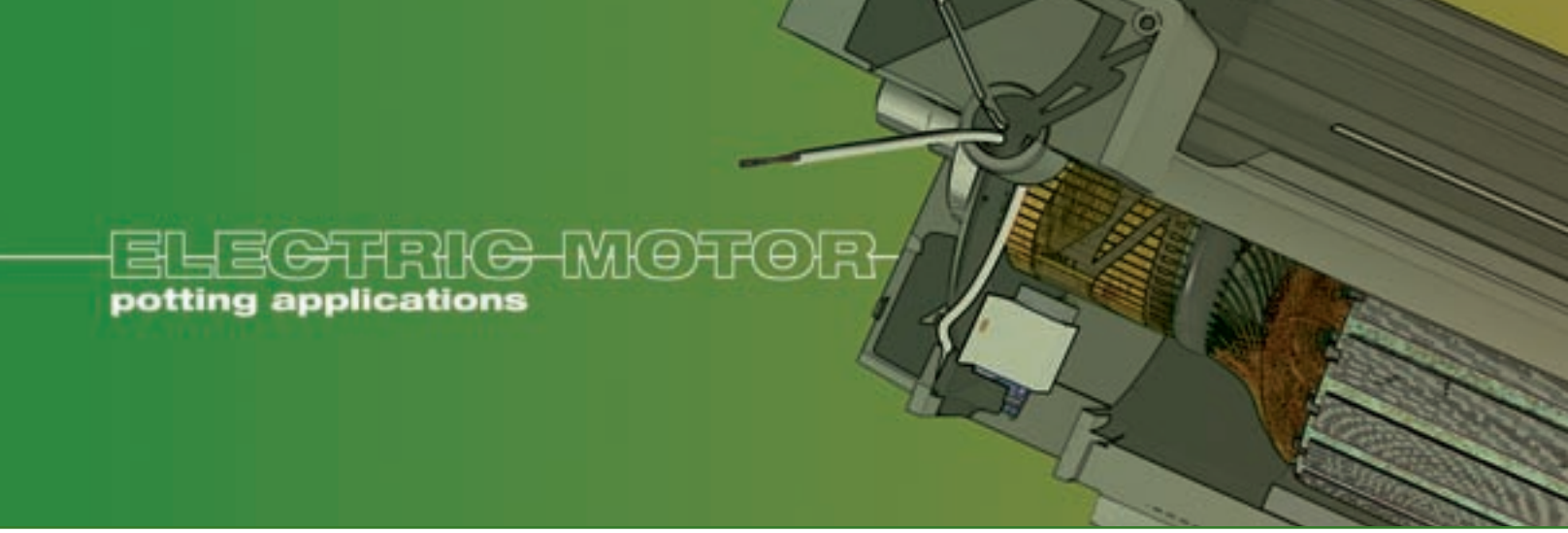

# ELECTRIC MOTOR
potting applications

## TYPICAL APPLICATIONS

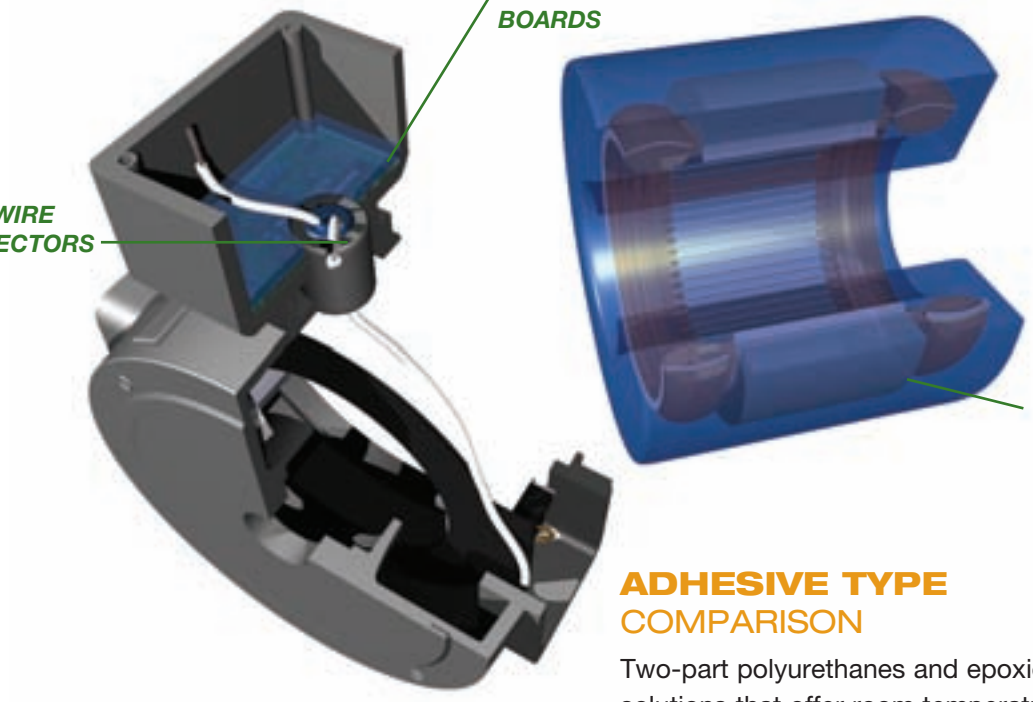


## OVERVIEW

Potting is used to seal motors from solvent and moisture ingress and to protect critical components, such as controller boards, from mechanical damage and degradation caused by thermal cycling, vibration, and impact. To accomplish this, an enclosure is normally filled with adhesive, completely encapsulating critical components and sealing the aperture. Potting is essential in explosion-proof motors and wash-down motors.

## ADHESIVE TYPE COMPARISON

Two-part polyurethanes and epoxies are economical solutions that offer room temperature curing with unlimited cure-through depths. As a result, they are often used when potting large volumes. Epoxies generally offer better thermal and solvent resistance than urethanes, while urethanes are lower in cost and have higher flexibility. One-part heat-cure epoxies perform similarly to two-part epoxies but typically have better adhesion to plastics and are fully cured in an hour.

Light curing acrylics and light curing silicones are normally used for shallow potting applications. These chemistries offer much faster processing speeds, but at a higher volumetric cost.

*Table 4* compares and contrasts the most commonly used types of adhesives for potting applications.

## TABLE 4. COMPARISON OF ADHESIVE TYPES FOR POTTING

| ATTRIBUTE | | ACRYLIC, LIGHT CURE | EPOXY, ONE-PART HEAT CURE | EPOXY, TWO-PART | SILICONE, LIGHT CURE | SILICONE, TWO-PART | URETHANE, TWO-PART |
|---|---|---|---|---|---|---|---|
| **OVERVIEW** | | | | | | | |
| **Key Benefits** | | • Fast fixture<br>• Fast full cure<br>• Good adhesion | • High gap fill<br>• Excellent temperature resistance<br>• Fully cured in one hour | • High thermal resistance<br>• High chemical resistance<br>• Excellent adhesion<br>• UL 1446 recognized | • Fast fixture speed<br>• Flexible<br>• Excellent chemical resistance to polar solvents<br>• Good temperature resistance | • Ultra clear<br>• Moderate to re-enterable gels available<br>• Room temperature cure | • Low cost<br>• Flexible<br>• Excellent UV resistance |
| **Key Considerations** | | • Light source required<br>• Shadowed areas may not cure<br>• Low gap fill | • Curing equipment required<br>• Long cure times<br>• Must allow parts to cool | • Must be mixed<br>• Long cure time | • Light source required<br>• Limited adhesion<br>• May contaminate painting processes<br>• Some formulations may cause corrosion | • Two-part – requires mixing<br>• Catalyst is sensitive to metals<br>• Slow gel time | • Must be mixed<br>• Long cure time<br>• Moisture contamination during processing<br>• Must handle isocyanates |
| **PERFORMANCE** | | | | | | | |
| **Adhesive to Substrates** | **Metals** | Good | Excellent | Excellent | Good | Good | Good |
| | **Plastics** | Excellent | Good | Good | Fair | Very Good | Very Good |
| | **Paper** | Excellent | Excellent | Excellent | Good | Good | Good |
| **Gap Fill** | **Ideal** | 0.020" to 0.125" | 0.050" to 0.25" | 0.050" to 0.25" | 0.020" to 0.125" | 0.050" to 0.125" | 0.050" to 0.25" |
| | **Maximum** | 0.250" | >0.50" | >0.50" | 0.250" | 0.49" | >0.50" |
| **Glass Transition Temperature (Tg)** | | 86°F to 176°F (30°C to 80°C) | 122°F to 194°F (50°C to 90°C) | 122°F to 194°F (50°C to 90°C) | <-40°F (<-40°C) | <-40°F (<-40°C) | 14°F to 122°F (-10°C to 50°C) |
| **Temperature Resistance** | **Typical Range** | -65°F to 300°F (-54°C to 149°C) | -65°F to 300°F (-54°C to 149°C) | -65°F to 300°F (-54°C to 149°C) | -65°F to 350°F (-54°C to 176°C) | -67°F to 302°F (-55°C to 150°C) | -65°F to 250°F (-54°C to 121°C) |
| | **Maximum** | 350°F (176°C) | 400°F (204°C) | 400°F (204°C) | 400°F (204°C) | 392°F (200°C) | 300°F (149°C) |
| **PROCESSING** | | | | | | | |
| **Fixture Time** | **Average** | 30 seconds | 30 to 45 minutes | 30 minutes | 45 seconds | 20 to 120 minutes | 30 minutes |
| | **Fastest** | 5 to 10 seconds | 15 to 30 minutes | 5 to 10 minutes | 30 seconds | 20 minutes | 5 to 10 minutes |
| **Full Cure** | | 30 seconds | 1 hour | 24 hours | 24 to 72 hours | 24 hours | 24 hours |
| **Equipment Required** | | Light source | Cure oven | Two-part dispense equipment | Light source | Two-part dispensing, oven | Two-part dispense equipment |
| **LOCTITE® BRAND PRODUCTS** | | • 3101™ – Multi-Cure<br>• 366™ – UV + Activator | • 3335™ – UV Initiation<br>• 3981™ – General-Purpose<br>• 3982™ – Medium Viscosity<br>• 3985™ – High Viscosity | • 193124 / 193125 – UV Dual Cure<br>• E-60NC™ – General-Purpose<br>• 3140™ / 3164™ – UL 1446 & UL 94 HB<br>• 3145™/3162™ – UL 94 V-0<br>• E-40EXP™ – UL 1203 | • 5240™ – Dual Cure<br>• 5055™ – Flowable<br>• 5056™ – High Adhesion | • 5620™ – Fast Cure<br>• 5623™ – Tack-Free Gel<br>• 5625™ – Soft Gel<br>• 5611™ F – Fast, UL 94 V-0<br>• 5611™ S – Slow, UL 94 V-0 | • 3364™ – Very Fast, UL 94 V-0<br>• 3173™ / 3182™ – Fast Cure<br>• 3173™ / 3183™ – General-Purpose<br>• 3173™ / 3184™ – UL 94 V-0 |

*For additional information on the Loctite® products listed, please refer to the product selector in the back of this guide or visit www.loctite.com/datasheets.*

# ELECTRIC MOTOR
## retaining applications

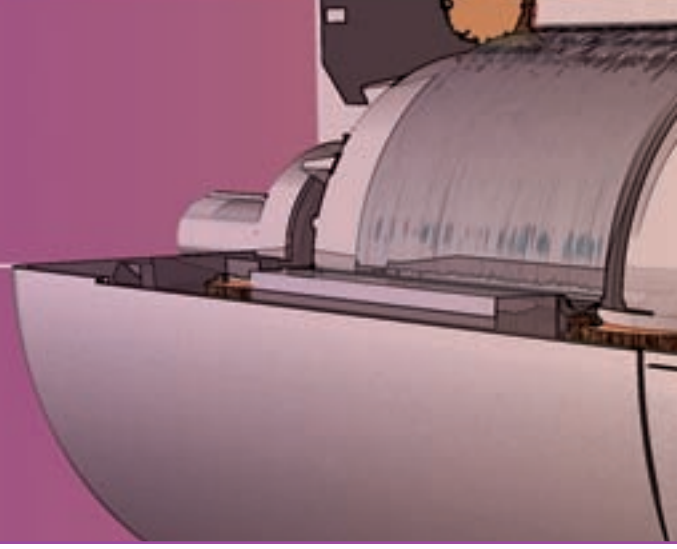

## TYPICAL APPLICATIONS

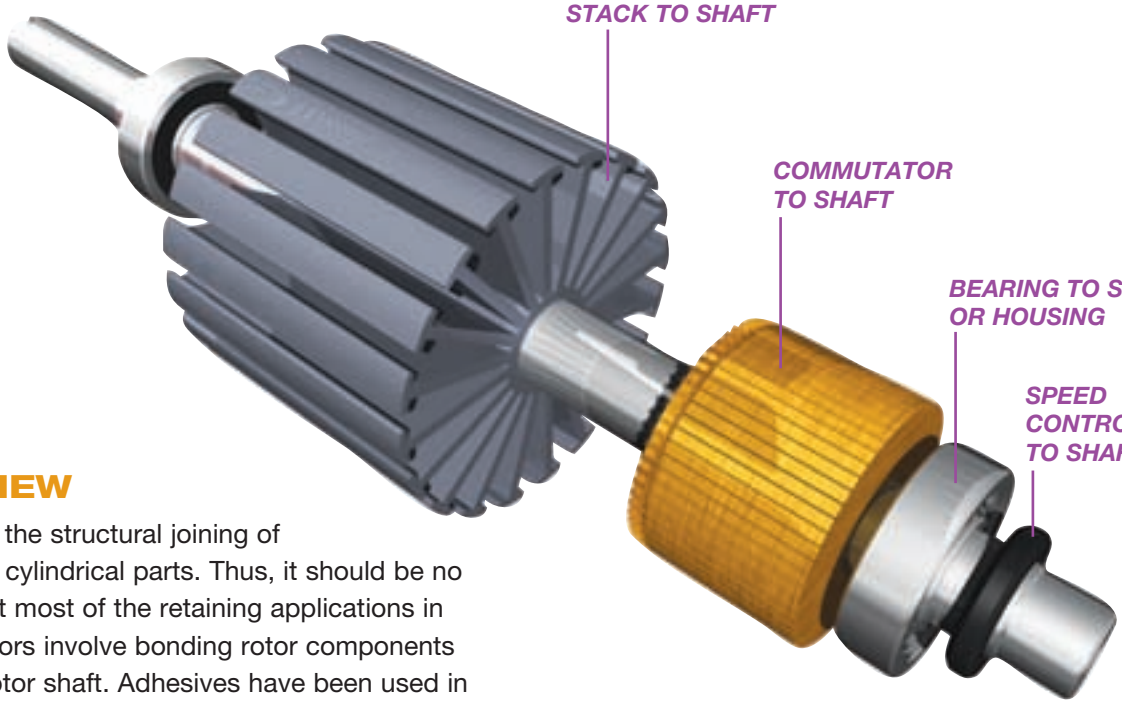


## OVERVIEW

Retaining is the structural joining of close-fitting cylindrical parts. Thus, it should be no surprise that most of the retaining applications in electric motors involve bonding rotor components onto the motor shaft. Adhesives have been used in electric motors for decades to augment or replace frictional methods, such as press and shrink fits, and mechanical methods, such as splines, keys, and locking pins.

***The key benefits of adhesives over alternative methods are:***

- Lower cost components
- Lower energy costs
- Easier to automate
- Eliminate wallowing and backlash of mechanical fits
- Eliminate run-out and warping of shaft
- Prevent fretting corrosion
- Prevent galvanic corrosion

## ADHESIVE TYPE COMPARISON

Anaerobic adhesives are the dominant adhesive chemistry for metal-to-metal retaining applications. Anaerobics are single component and high strength, with a rapid cure at room temperature. When used with primers, they can achieve fixture times of less than 10 seconds.

When plastic components require retaining, cyanoacrylate adhesives are often used.

***Table 5*** compares and contrasts anaerobics for retaining.

# RETAINING



## TABLE 5. COMPARISON OF ADHESIVE TYPES FOR RETAINING

| ATTRIBUTE | | ANAEROBIC | |
|---|---|---|---|
| | | LIQUID | SEMISOLID STICK |
| **OVERVIEW** | | | |
| Key Benefits | | • High strength<br>• Excellent chemical resistance<br>• High temperature resistance<br>• Light cure available | • Semisolid form<br>• Will not drip or migrate<br>• High strength<br>• High thermal and chemical resistance |
| Key Considerations | | • Cannot be used with plastics<br>• Cure speed highly dependent upon substrate<br>• May require use of activator | • Cannot be used with plastics<br>• Cure speed highly dependent upon substrate<br>• May require use of activator |
| **PERFORMANCE** | | | |
| Shear Strength (Steel) | | 3,000 to 4,000 psi | 3,000 to 4,000 psi |
| Suitable for Use With | Metals | Yes | Yes |
| | Plastics | No | No |
| Gap Fill | Ideal | 0.001" to 0.003" | 0.001" to 0.003" |
| | Maximum | 0.010" | 0.005" |
| Temperature Resistance | Typical Range | -65°F to 300°F (-54°C to 149°C) | -65°F to 300°F (-54°C to 149°C) |
| | Maximum | 400°F (204°C) | 400°F (204°C) |
| **PROCESSING** | | | |
| Fixture Time | Average | 5 to 10 minutes | 30 minutes |
| | Fastest | 5 minutes – unprimed<br><10 seconds – primed | 30 minutes – unprimed<br><1 minute – primed |
| Full Cure | | 24 hours | 24 hours |
| **LOCTITE® BRAND PRODUCTS** | | • 603™ – General-Purpose<br>• 648™ – Fast Cure<br>• 620™ – High Temperature<br>• 638™ – High Strength<br>• 290™ – Wicking Grade<br>• 661™ – Light Cure | • 668™ – General-Purpose |

*For additional information on the Loctite® products listed, please refer to the product selector in the back of this guide or visit www.loctite.com/datasheets.*

# ELECTRIC MOTOR
## tacking applications

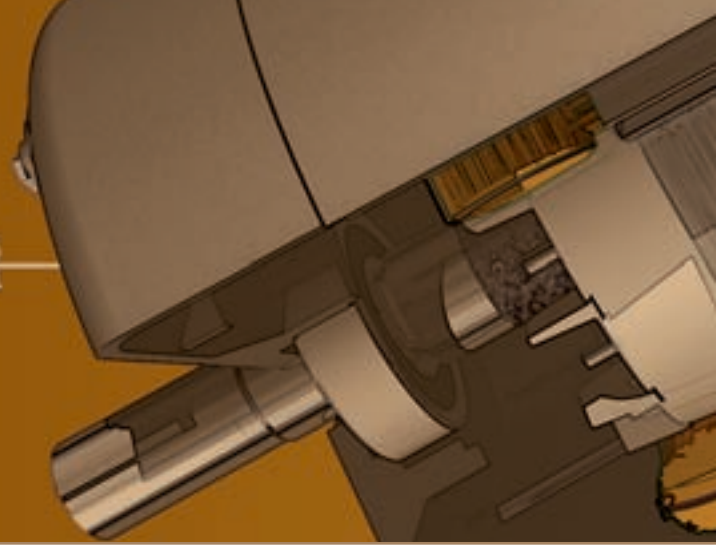

## TYPICAL APPLICATIONS

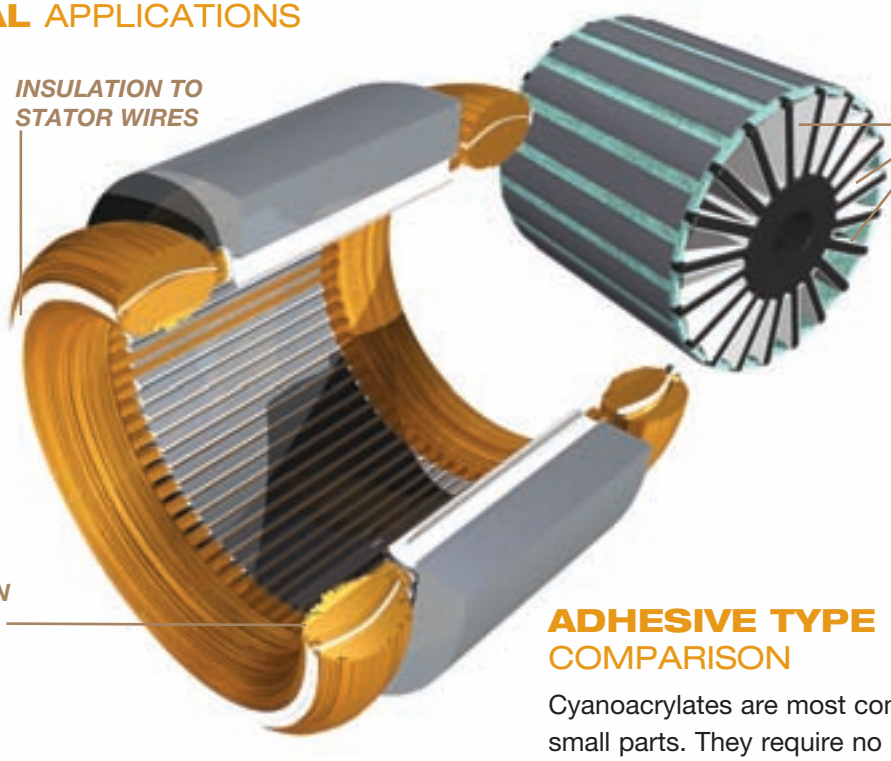


## OVERVIEW

Tacking applications are bonding applications where the adhesive is used to fixture the assembly very quickly. Adhesives are commonly used to tack lead wires, individual wires, and insulation in electric motors. It is very common to tack lead wires and individual wires into position to reinforce them. Tacking is also used as a processing aid to ensure that the insulation on a motor or generator remains in the correct position until the entire assembly is unitized with varnish. This prevents electrical shorts caused by the insulation moving during subsequent operations, such as mechanical shaping of the stator wires in large motors and generators.

## ADHESIVE TYPE COMPARISON

Cyanoacrylates are most commonly used to tack small parts. They require no equipment, cure rapidly at room temperature, achieve very high strengths to most substrates, and any excess can be quickly cured with accelerator or light.

Hot melt adhesives are normally used on larger parts due to their low volumetric cost. They have fast cure speed and good adhesion to most substrates, and can be sprayed from handheld applicators.

Light cure acrylic adhesives offer virtually unlimited positioning time with cure-on-command capability. If light can reach the joint, such as when wire tacking or through insulation paper, light cure is often the most user-friendly process.

*Table 6* compares and contrasts the most commonly used types of adhesives for tacking applications.

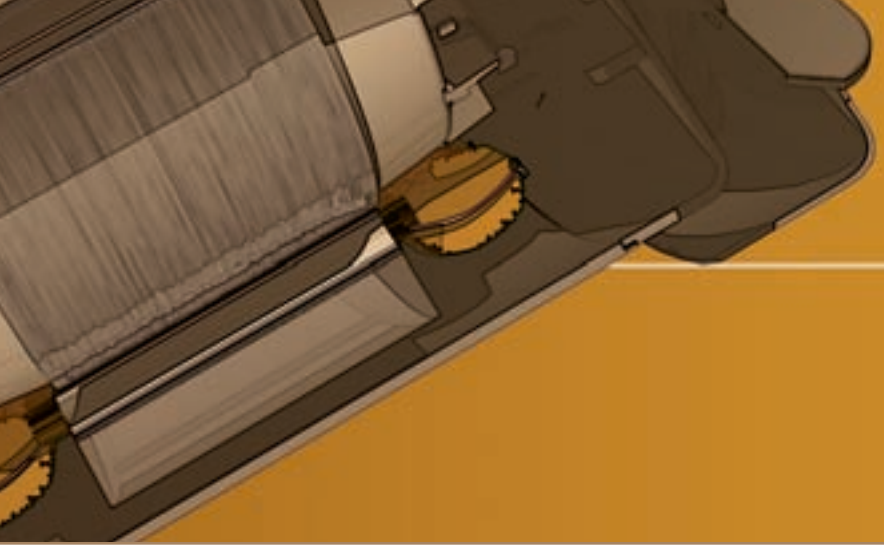

# TACKING



## TABLE 6. COMPARISON OF ADHESIVE TYPES FOR TACKING

| ATTRIBUTE | | ACYRLIC, LIGHT CURE | CYANOACRYLATE | HOT MELT |
|---|---|---|---|---|
| **OVERVIEW** | | | | |
| Key Benefits | | • Fast fixture<br>• Fast full cure<br>• Good adhesion to metals, plastics, and paper | • Fast fixture<br>• High adhesion to most substrates<br>• No equipment required<br>• Light cure available | • Fast fixture<br>• Low volumetric cost<br>• Many types offer wide range of performance |
| Key Considerations | | • Light source required | • Low gap fill<br>• Low temperature resistance<br>• Durability may be affected by substrate corrosion | • May have poor adhesion to metals<br>• Dispensing equipment required<br>• Hot dispense point can be a safety concern |
| **PERFORMANCE** | | | | |
| Adhesive to Substrates | Metals | Good | Very Good | Good |
| | Plastics | Excellent | Excellent | Very Good |
| | Paper | Excellent | Excellent | Excellent |
| Gap Fill | Ideal | 0.002" to 0.010" | 0.001" to 0.003" | 0.002" to 0.005" |
| | Maximum | 0.25" | 0.010" | 0.25" |
| Temperature Resistance | Typical Range | -65°F to 300°F (-54°C to 149°C) | -65°F to 180°F (-54°C to 82°C) | -65°F to 250°F (-54°C to 121°C) |
| | Maximum | 350°F (176°C) | 250°F (121°C) | 330°F (165°C) |
| **PROCESSING** | | | | |
| Fixture Time | Average | 30 seconds | 20 seconds | 30 seconds |
| | Fastest | 5 to 10 seconds | 5 to 10 seconds | 5 to 10 seconds |
| Full Cure | | 30 seconds | 24 hours | <4 hours |
| Equipment Required | | Light source | No | Hot melt dispenser |
| **LOCTITE® BRAND PRODUCTS** | | • 3972™ – General-Purpose, Low cPs<br>• 3971™ – General-Purpose, Medium cPs<br>• 3944™ – High Adhesion to Metals<br>• 3926™ – High Adhesion to Plastics<br>• 3526™ – Activator Cure | • 4203™ – Low cPs - Thermally Resistant<br>• 4204™ – Medium cPs - Thermally Resistant<br>• 4205™ – Gel - Thermally Resistant<br>• 4311™ – Medium cPs - UV Cure<br>• 712™ – Accelerator - Isopropanol<br>• 7452™ – Accelerator - Acetone | • 7804FRM-HV™ – General-Purpose<br>• 3631™ – High Adhesion to Metals<br>• 0450™ – Long Open Time<br>• 7901™ – High Temperature |

*For additional information on the Loctite® products listed, please refer to the product selector in the back of this guide or visit www.loctite.com/datasheets.*

# ELECTRIC MOTOR
## threadlocking applications

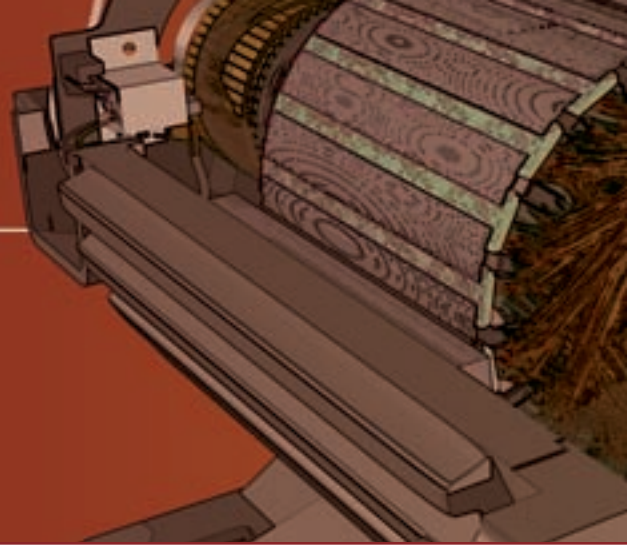

## TYPICAL APPLICATIONS

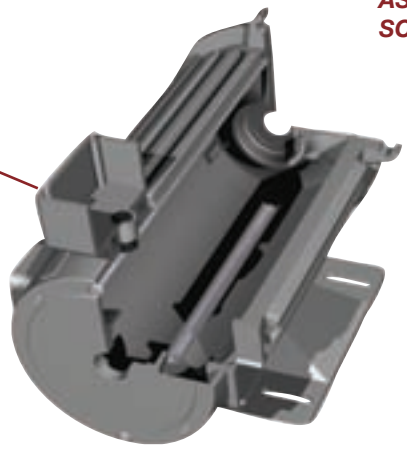


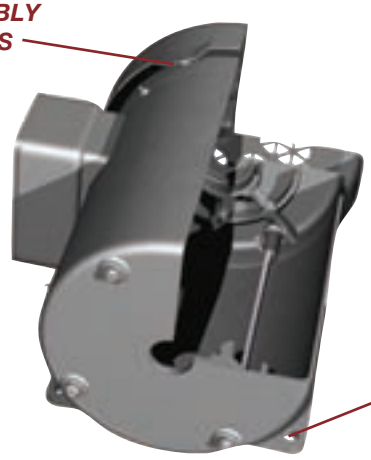


## OVERVIEW

Threadlockers prevent the loosening of threaded fasteners by completely filling the space between the threads, hardening to a strong polymer and bonding to both sides. Various viscosities and strengths are available to accommodate all fastener sizes. Threadlockers have a long history of improving the performance and reliability of threaded assemblies versus other frictional methods such as lock washers or stop nuts.

***The key benefits threadlockers offer are:***

- Lower cost
- More effective at preventing loosening
- Simple processing
- Controlled strengths
- Prevent corrosion

## ADHESIVE TYPE COMPARISON

Liquid anaerobic threadlockers are the most widely used method to prevent vibrational loosening of metal fasteners. The large line of Loctite® brand threadlockers offers a variety of viscosities, colors, strengths, and cure speeds.

Loctite® QuickStix™ are the most recent Henkel innovation. They offer the same performance as a liquid anaerobic threadlocker but in a semisolid stick. The stick form allows the threadlocker to be applied to a nut or screw in any orientation without drips, and ensures that excess adhesive will not migrate into the motor bearings or moving parts, which could cause reliability issues.

When threadlocking plastic fasteners or tamper-proofing the heads of screws, cyanoacrylate liquids are normally used. They rapidly cure in plastic joints and will not stress-crack most plastics.

***Table 7*** compares and contrasts the most commonly used types of threadlocking adhesives.

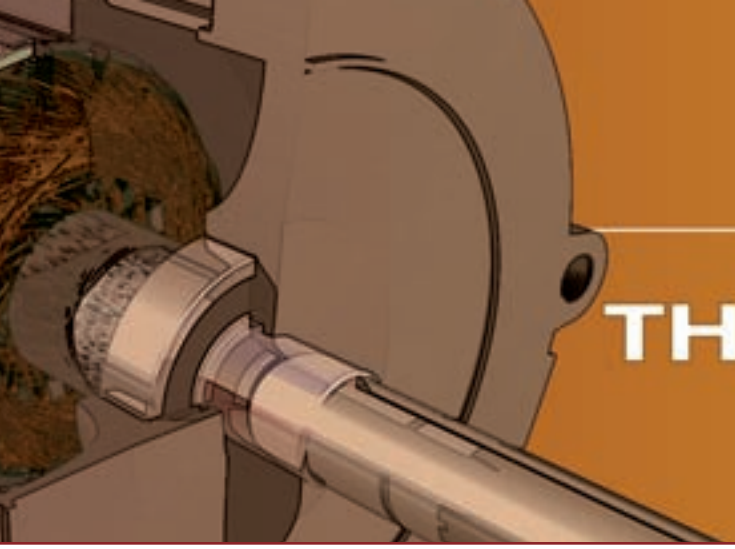

# THREADLOCKING

## TABLE 7. COMPARISON OF ADHESIVE TYPES FOR THREADLOCKING

| ATTRIBUTE | | ANAEROBIC | | CYANOACRYLATE |
|---|---|---|---|---|
| | | LIQUID | SEMISOLID STICK | |
| **OVERVIEW** | | | | |
| Key Benefits | | • Controlled strengths<br>• Variety of viscosities<br>• Color-coded by strength<br>• High thermal and chemical resistance<br>• Can post-apply wicking grade products<br>• Wide variety of products available | • Semisolid form will not drip or migrate<br>• Controlled strengths<br>• Color-coded by strength<br>• High thermal and chemical resistance | • Compatible with plastics<br>• Fast cure |
| Key Considerations | | • Not for use on plastics | • Not for use on plastics | • Low thermal and chemical resistance |
| **PERFORMANCE** | | | | |
| Suitable for Use With | Metals | Yes | Yes | Yes |
| | Plastics | No | No | Yes |
| Temperature Resistance | Typical Range | -65°F to 300°F (-54°C to 149°C) | -65°F to 300°F (-54°C to 149°C) | -65°F to 180°F (-54°C to 82°C) |
| | Maximum | 450°F (232°C) | 300°F (149°C) | 180°F (82°C) |
| **PROCESSING** | | | | |
| Cure Speed | Fixture | 5 to 10 minutes | 10 to 20 minutes | 1 to 2 minutes |
| | Full Cure | 24 hours | 24 hours | 24 hours |
| **LOCTITE® BRAND PRODUCTS** | | • 243™ – General-Purpose<br>• 222™ – Low Strength<br>• 2422™ – High Temperature<br>• 263™ – High Strength, Fast Set<br>• 290™ – Wicking Grade | • 248™ – General-Purpose<br>• 268™ – High Strength | • 425™ – Plastic Parts, Tamper-Proofing |

*For additional information on the Loctite® products listed, please refer to the product selector in the back of this guide or visit www.loctite.com/datasheets.*

henkelna.com/electricmotors

# ELECTRIC MOTOR
## thread sealing applications

## TYPICAL APPLICATIONS

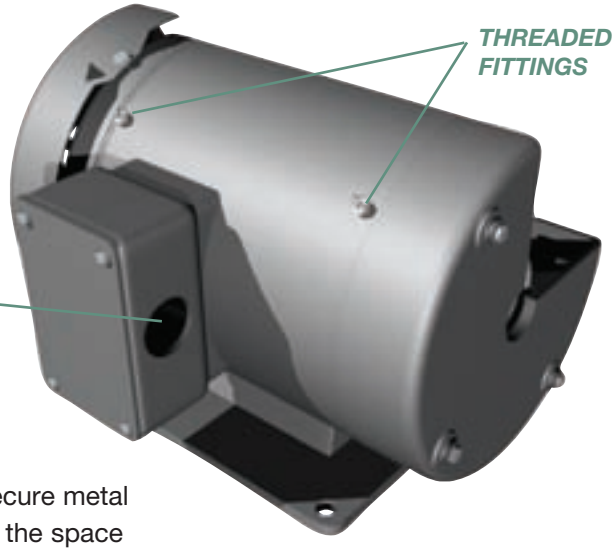


## OVERVIEW

Anaerobic thread sealants seal and secure metal pipes and fittings by completely filling the space between the threads and hardening to prevent leakage. They have additives that facilitate assembly and maintain controlled strength to allow for easy removal with basic hand tools. The cured product has excellent temperature and chemical resistance that is compatible with many of the most severe operating environments.

Anaerobic thread sealants have been replacing alternatives such as PTFE tape, pipe dope, and specialty fittings like dry seal fittings, flared fittings, compression fittings, and confined o-rings for decades.

***The advantages of anaerobic thread sealants over these methods are:***

- Lower cost fittings
- Easy to automate
- No solvents
- Will not shred and contaminate systems
- Easy assembly
- Corrosion protection

## ADHESIVE TYPE COMPARISON

Anaerobic thread sealants are the most widely used liquid products for sealing pipe fittings. The large line of Loctite® brand thread sealants offers a variety of viscosities, colors, strengths, and cure speeds.

Loctite® QuickStix™ are the most recent Henkel innovation. They offer the same performance as a liquid anaerobic thread sealant but in a semisolid stick. The stick form allows the thread sealant to be applied to a fitting in any orientation without drips and ensures that excess adhesive will not migrate into the motor housing or moving parts that could cause reliability issues.

When thread sealing plastic fittings, use Loctite® No More Leaks™, a solvent-based product, or Loctite® 55™ Pipe Sealing Cord.

*Table 8* compares and contrasts the most commonly used types of thread sealants.

# THREAD SEALING



## TABLE 8. COMPARISON OF ADHESIVE TYPES FOR THREAD SEALING

| ATTRIBUTE | | ANAEROBIC | | NONREACTIVE |
|---|---|---|---|---|
| | | LIQUID | SEMISOLID STICK | |
| **OVERVIEW** | | | | |
| Key Benefits | | • Controlled strengths<br>• Variety of viscosities<br>• High thermal and chemical resistance<br>• Wide variety of products available | • Semisolid form will not drip or migrate<br>• High thermal and chemical resistance | • Compatible with plastics |
| Key Considerations | | • Not for use on plastics | • Not for use on plastics | • May contain solvents |
| **PERFORMANCE** | | | | |
| Suitable for Use With | Metals | Yes | Yes | Yes |
| | Plastics | No | No | Yes |
| Temperature Resistance | Typical Range | -65°F to 300°F (-54°C to 149°C) | -65°F to 300°F (-54°C to 149°C) | -65°F to 300°F (-54°C to 149°C) |
| | Maximum | 400°F (204°C) | 300°F (149°C) | 400°F (204°C) |
| **PROCESSING** | | | | |
| Seals Operating Pressure | | 4 hours | 4 hours | Instant |
| **LOCTITE® BRAND PRODUCTS** | | • 565™ – General-Purpose<br>• 545™ – Hydraulic/Pneumatic<br>• 554™ – Refrigerant<br>• 567™ – High Temperature<br>• 592™ – Slow Cure | • QuickStix™ 561™ PST® – General-Purpose<br>• QuickStix™ 5671™ PST® – Stainless Steel | • 55™ Pipe Sealing Cord<br>• Thread Sealant for Oxygen Systems<br>• No More Leaks™ – Solvent-Based |

*For additional information on the Loctite® products listed, please refer to the product selector in the back of this guide or visit www.loctite.com/datasheets.*

henkelna.com/electricmotors

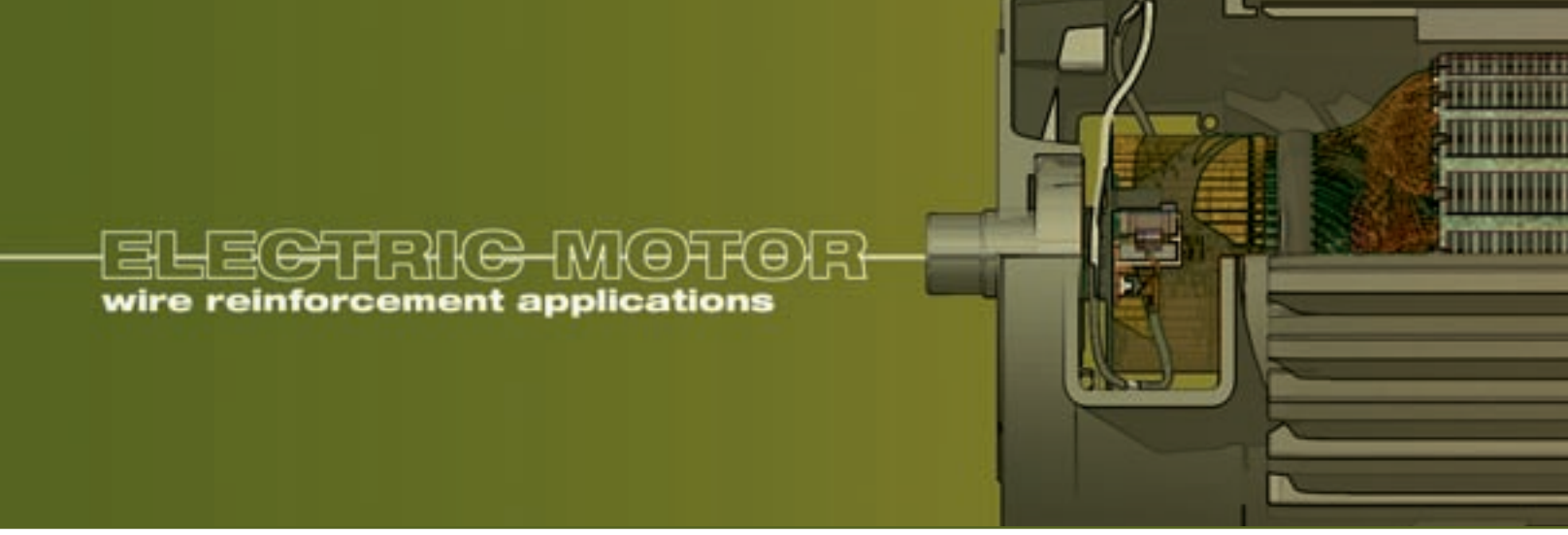

# ELECTRIC MOTOR
## wire reinforcement applications

## TYPICAL APPLICATIONS

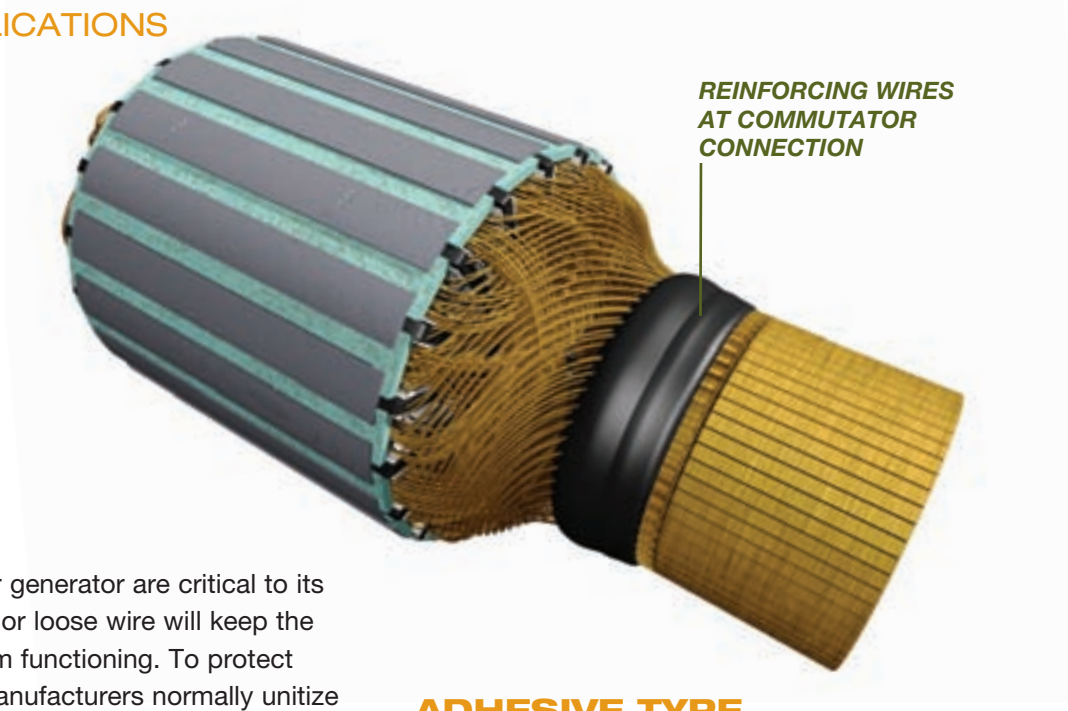


## OVERVIEW

The wires in a motor or generator are critical to its operation. One broken or loose wire will keep the motor or generator from functioning. To protect against wire breaks, manufacturers normally unitize the wires in rotors and stators with varnish. The solvent-based varnishes that are used may be sufficient for many applications, but do not offer enough protection for all applications. For example, it is very common to reinforce the wires that connect to the commutator in DC motors when the motor will be in service in high impact or vibration service environments, such as in power tools or in sink garbage disposals. In these applications, the thin coating of varnish on the wires that connect to the commutator does not offer sufficient reinforcement to prevent the flexing fatigue that can lead to failure. To reinforce these wires, a medium viscosity epoxy coating is applied that is thin enough to surround the wires, but thick enough to build up a rigid coating.

## ADHESIVE TYPE COMPARISON

For high-volume production, one-part heat cure epoxies are often the optimum method for reinforcing wires. They are easy to process, have excellent electrical properties, and can normally be dispensed and cured in the varnish trickle cure oven. Since the epoxy coating is being cured in the varnish cure oven, it does not add any work-in-process or time-to-manufacture to the process and the equipment, and maintenance costs are very low.

Two-part epoxies are generally used in work cells where it is desired to dispense the adhesive manually and allow it to cure at room temperature.

***Table 9*** compares and contrasts the most commonly used types of adhesives for wire reinforcement.

## TABLE 9. COMPARISON OF ADHESIVE TYPES FOR WIRE REINFORCEMENT

| ATTRIBUTE | | EPOXY, ONE-PART HEAT CURE | EPOXY, TWO-PART |
|---|---|---|---|
| **OVERVIEW** | | | |
| Key Benefits | | • Can cure adhesive in varnish cure oven<br>• No mixing required | • Room temperature cure<br>• Can accelerate cure with heat |
| Key Considerations | | • Cool-down time after cure | • Adhesive cures in mix tip<br>• Adhesive waste due to pot life |
| **PERFORMANCE** | | | |
| Adhesive to Substrates | Metals | Excellent | Excellent |
| | Plastics | Good | Good |
| | Paper | Excellent | Excellent |
| Gap Fill | Ideal | 0.050" to 0.100" | 0.050" to 0.100" |
| | Maximum | >0.50" | >0.50" |
| Temperature Resistance | Typical Range | -65°F to 350°F (-54°C to 176°C) | -65°F to 300°F (-54°C to 149°C) |
| | Maximum | 400°F (204°C) | 400°F (204°C) |
| **PROCESSING** | | | |
| Fixture Time | | 30 to 60 minutes | 20 to 30 minutes |
| Full Cure | | 1 hour | 24 hours |
| **LOCTITE® BRAND PRODUCTS** | | • 3985™ – General-Purpose | • E-40FL™ – General-Purpose<br>• E-20HP™ – High Impact<br>• E-05MR™ – Fast, Moisture Resistant |

*For additional information on the Loctite® products listed, please refer to the product selector in the back of this guide or visit www.loctite.com/datasheets.*

henkelna.com/electricmotors

# ELECTRIC MOTOR
## surface treatment applications

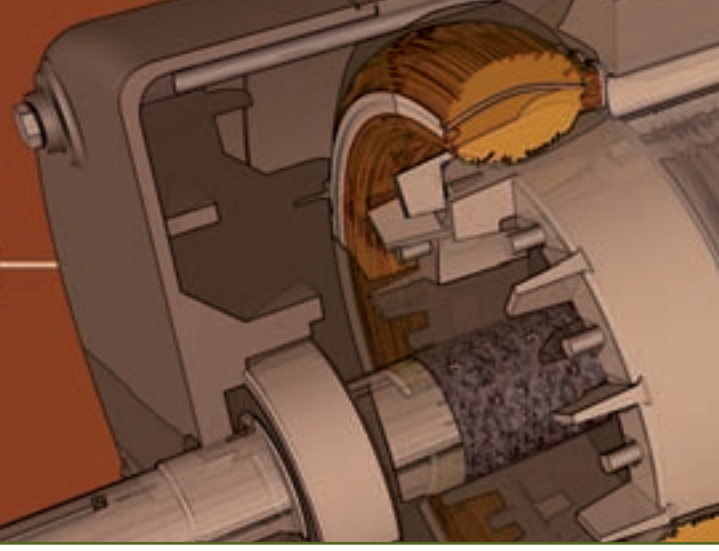

## TYPICAL APPLICATIONS

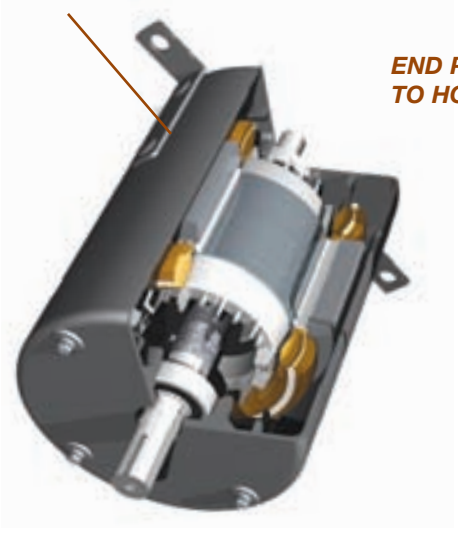


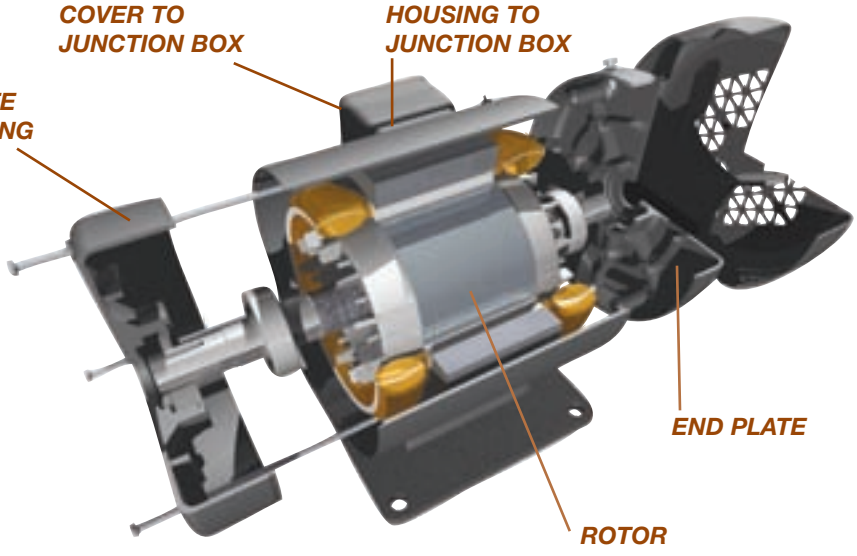


## OVERVIEW

As the market and technology leader for metal pretreatments, autodeposition coatings, and metalworking fluids, Henkel has the technology, expertise, and support to improve your products and processes.

## METALWORKING

Henkel is continually improving its metalworking capabilities. Recent innovations include synthetic drawing fluids, biostatic coolants, and low VOC finishing lubricants.

| Product Type | Leading Henkel Brands |
|---|---|
| Stamping Compounds | Multan® F, Multan® PL, Multan® DFL |
| Machining Coolants | Multan®, Multan® CR |
| Corrosion Preventatives | P3® Prevox™ |
| In-Process Cleaners | P3® Neutracare® |

# SURFACE TREATMENT



## METAL PRETREATMENT

Recent Henkel innovations include:

- Bonderite® NT-1™, a nano-ceramic pretreatment
- A laser scale removal process
- Internally accelerated zinc phosphate coatings
- Dry-in-place conversion coatings
- Alodine® and Alodine® EC² for aluminum

### Bonderite® NT-1™

Bonderite® NT-1™ is an ambient temperature, phosphate-free pretreatment that creates a nano-ceramic coating on steel, zinc, and aluminum surfaces.

#### Benefits vs. Phosphate Pretreatment:

- Higher Performance – Innovative nanotechnology provides better edge definition and adhesion for paints. The corrosion resistance is better than iron phosphate.
- Lower Operating Cost – The waste treatment costs are virtually eliminated and the ambient coating process significantly reduces energy costs.
- Environmentally Responsible – The process is phosphate- and heavy metal-free with minimal waste treatment. It also complies with even the strictest municipal codes.
- Higher Throughput – The treatment time is faster, increasing production capacity.
- Maintenance-Free – There is virtually no sludge buildup in the tank.
- No Post-Treatment – Sealing is not required for exceptional corrosion resistance.
- Reliable – Simple, low maintenance process is easy to monitor and control.

| Product Type | Leading Henkel Brands |
|---|---|
| Cleaners | Parco®, Deoxidine®, Ridoline®, P3® |
| Conversion Coatings | Prep-N-Cote®, Bonderite®, Alodine® |
| Post-Treatments | Parcolene® |
| Anodizing | Deoxidine®, Ridoline®, P3 Almeco®, Aluminux®, P3 Almecolor™, Spectrocolor® |

## AUTODEPOSITION SURFACE COATINGS

Aquence® brand autodeposition coatings are a patented technology from Henkel. These coatings can be simpler, safer, faster, higher performance, and have a smaller process footprint when compared to alternative coatings. For more info on Autophoretic® brand coatings, please turn the page.

### Aquence®

Aquence® brand coatings are chemical coating processes where an organic polymeric emulsion of PVDC or epoxy is chemically deposited on the surface of a clean, metal substrate.

#### Benefits vs. Alternative Coatings:

- Higher Consistency – Extremely uniform coating thickness on all surfaces, including electrically shielded areas such as inner diameters of tubes.
- Up to 40% Smaller Footprint – The simple, four-stage process also allows for much higher rack density.
- No Pretreatment Required – No phosphate pretreatment is required to achieve exceptional corrosion resistance.
- Coat Entire Assemblies – The uniform coating that is created will not build up or bridge. This allows entire assemblies, even threaded assemblies, to be coated at once.
- User-Friendly – No rack masking or stripping is required.
- Reliable – Simple process is easy to monitor and control.
- Safer – Low or zero VOC water-based process does not require electricity.
- Fewer steps than conventional painting – less space/time.
- Coats only reactive metals (assembles and R/M possible).

| Product Type | Leading Henkel Brands |
|---|---|
| Cleaners, Coatings, and Reaction Rinses | Aquence® |

***Please contact Technical Services at Henkel Corporation for more information on our surface technologies.***

# ELECTRIC MOTOR
## product selector

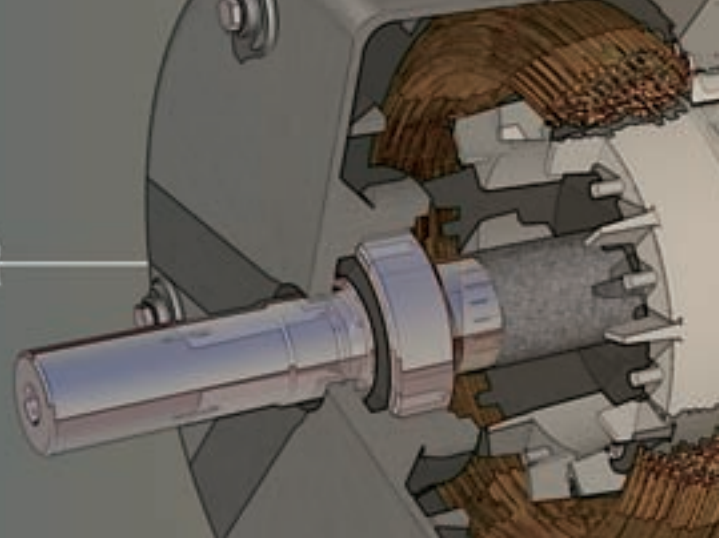

| | CHEMISTRY | TYPICAL USE | PRODUCT NUMBER | # OF COMP. | CURE METHOD | COLOR | VISCOSITY (cP) | FIXTURE TIME | CURE-THROUGH DEPTH, IN. |
|---|---|---|---|---|---|---|---|---|---|
| GENERAL BONDING | ACRYLICS | Fast Cure, Acid-Free | 331™ | 2 | Activator | Cream | 20,000 | 20 sec. | 0.039 |
| | | Metal Bonding | H4500™ Speedbonder™ | 2 | Two-Part (10:1) | Pale Yellow | 55,000 | 15 to 20 min. | >0.5 |
| | | High Impact | H8000™ Speedbonder™ | 2 | Two-Part (10:1) | Green | 150,000 | 15 to 20 min. | >0.5 |
| | | Severe Environment | H8600™ Speedbonder™ | 2 | Two-Part (2:1) | Blue | 90,000 | 55 min. | >0.5 |
| | EPOXIES | High Impact | E-20HP™ Hysol® | 2 | Two-Part (2:1) | Off-White | 45,000 | 60 min. | >0.5 |
| | | Moisture Resistant | E-05MR™ Hysol® | 2 | Two-Part (1:1) | Ultra-Clear | 25,000 | 15 min. | >0.5 |
| | | High Temperature | E-40HT™ Hysol® | 2 | Two-Part (2:1) | Off-White | 430,000 | 165 min. | >0.5 |
| | | Ultra Tough | E-30UT™ Hysol® | 2 | Two-Part (2:1) | Purple | 12,200 | 180 min. | >0.5 |
| | | Toughened, High Adhesion | E-214HP™ Hysol® | 1 | One-Part Heat | Light Grey | Paste | 2 hrs. | >0.5 |
| | | Induction Cure for Fast Throughput | E-220IC™ Hysol® | 1 | One-Part Heat/ Induction | Grey | Paste | 40 sec. (induction) | >0.5 |
| | POLYURETHANES | Fast, High Strength | U-05FL™ Hysol® | 2 | Two-Part (1:2) | Off-White | 100,000 | 15 min. | >0.5 |
| | CYANOACRYLATES | Toughened, UV Cure | 4311™ Flashcure® | 1 | One-Part, Moisture/UV | Clear-Pale Green | 900 | 5 sec. | 0.079 |
| | | Low Viscosity, Toughened, High Temperature | 4203™ Prism® | 1 | One-Part, Moisture | Clear | 375 | 30 sec. | 0.059 |
| | | Mid-Viscosity, Toughened, High Temperature | 4204™ Prism® | 1 | One-Part, Moisture | Clear | 4,000 | 31 sec. | 0.079 |
| | | Gel, Toughened, High Temperature | 4205™ Prism® | 1 | One-Part, Moisture | Clear | Gel | 32 sec. | 0.098 |
| | HOT MELTS | General-Purpose | 0450™ Hysol® SprayPac™ | 1 | Cooling | Natural | 4,500 | 5 to 8 min. | 0.236 |
| | | General-Purpose | 7804FRM-HV Hysol® | 1 | Cooling | Amber | 6,000 | 35 sec. | 0.236 |
| | | General-Purpose | 7901™ Hysol® | 1 | Cooling | Amber | 750 | 35 sec. | 0.236 |
| | | High Adhesion to Metals | 3631™ Hysol® | 1 | Cooling/Humidity | Off-White | 12,500 | 60 sec. | 0.236 |
| | ELASTOMERIC BONDING | Primerless Adhesion | 5512™ | 1 | One-Part, Moisture | Black | Paste | 60 min. | >0.5 |
| MAGNET BONDING | ACRYLICS | Fast Cure, Acid-Free | 331™ | 2 | Activator/Heat | Cream | 20,000 | 20 sec. | 0.039 |
| | | High Impact | 392™ | 2 | Activator | Amber | 60,000 | 60 sec. | 0.020 |
| | | Humidity Resistance | A-671™ | 2 | External Mix | Green | 15,000 | 55 sec. | 0.051 |
| | | Large Gap Fill | A-6750™ | 2 | External Mix | Green | 30,000 | 30 to 60 sec. | 0.098 |
| | | Acid-Free | 3060™ | 2 | External Mix | Green | 30,000 | 10 to 13 min. | 0.201 |
| | EPOXIES | Toughened, High Adhesion | E-214HP™ Hysol FISCHBACH KG KUNSTSTOFF-TECHNIK | 1 | One-Part Heat | Light Grey | Paste | 2 hrs. | >0.5 |
| | | Induction Cure for Fast Throughput | E-220IC™ Hysol® | 1 | One-Part Heat/ Induction | Grey | Paste | 40 sec. (induction) | >0.5 |

| TEMP. RANGE | PACKAGE SIZE – PART NUMBER | | | | |
|---|---|---|---|---|---|
| -65°F to 350°F (-54°C to 177°C) | 25 ml syringe with manual plunger - 1057673 | 1 liter - 1057674 | 10 liter pail - 1062124 | 25 ml EFD syringe w/o manual plunger - 1256398 | |
| -65°F to 300°F (-54°C to 150°C) | 50 ml dual cartridge (s style) - 996512 | 490 ml dual cartridge - 83041 | Resin - 40 lb. pail - 83043*<br>Hardener - 40 lb. pail - 83042* | | |
| -65°F to 300°F (-54°C to 150°C) | 50 ml dual cartridge (s style) - 996453 | 490 ml dual cartridge -36160 | Resin - 35 lb. pail - 35939*<br>Hardener - 45 lb. pail - 35940* | Resin - 55 gal. drum - 37009* | |
| -65°F to 400°F (-54°C to 204°C) | 50 ml dual cartridge - 40875 | 400 ml dual cartridge - 38762 | Resin - 40 lb. pail - 38760*<br>Hardener - 45 lb. pail - 38761* | Resin - 425 lb. drum - 1010342*<br>Hardener - 425 lb. drum - 1010333* | |
| -65°F to 400°F (-54°C to 204°C) | 50 ml dual cartridge - 29314 | 200 ml dual cartridge - 29315 | 400 ml dual cartridge - 29316 | Resin - 5 gal. pail - 29317*<br>Hardener - 5 gal. pail - 29318* | |
| -65°F to 250°F (-54°C to 121°C) | 25 ml syringe with manual plunger - 1087601 | 50 ml dual cartridge - 1086598 | 200 ml dual cartridge - 1086600* | 400 ml dual cartridge - 1086599* | Resin - 5 gal. pail - 1087602*<br>Hardener - 5 gal. pail - 1087603* |
| -65°F to 400°F (-54°C to 204°C) | 50 ml dual cartridge - 1086065 | 400 ml dual cartridge - 1086081 | | | |
| -65°F to 300°F (-54°C to 150°C) | 50 ml dual cartridge - 1078234 | 400 ml dual cartridge - 1078235 | | | |
| -65°F to 300°F (-54°C to 150°C) | 30 ml EFD syringe - 29339 | 300 ml cartridge - 29340 | 5 gal. pail - 29341 | | |
| -65°F to 300°F (-54°C to 150°C) | 31 ml EFD syringe - 1078250 | 1 liter bottle - 1078261 | 5 gal. pail - 1078499 | | |
| -65°F to 250°F (-54°C to 121°C) | 50 ml dual cartridge - 29348 | 200 ml dual cartridge - 29349 | 400 ml dual cartridge - 29350 | Resin - 5 gal. pail - 29351*<br>Hardener - 5 gal. pail - 29352* | |
| -65°F to 239°F (-54°C to 115°C) | 1 oz. bottle - 14001791 | 1 lb. bottle - 1401789 | | | |
| -65°F to 250°F (-54°C to 121°C) | 1 oz. bottle - 1376970 | 1 lb. bottle - 28027 | | | |
| -65°F to 250°F (-54°C to 121°C) | 3 g tube - 26839 | 1 oz. bottle - 1376969 | 1 lb. bottle - 26325 | | |
| -65°F to 250°F (-54°C to 121°C) | 20 g tube - 28028 | 200 g tube - 28029 | 300 g. cartridge - 28030 | | |
| -65°F to 160°F (-54°C to 70°C) | 12 oz. bag Polyshot™ - 83353 | 35 lb. carton Polyshot™ - 83354 | 12 oz. bag (red) Polyshot™ - 83355 | 35 lb. carton (red) Polyshot™ - 83356 | |
| -65°F to 230°F (-54°C to 110°C) | 13 oz. bag Polyshot™ - 83386 | 40 lb. carton pellets - 83382 | 5 oz. bag - 10 in. superstick - 83383 | 30 lb. pail - 10 in. superstick - 83384 | 25 lb. pail Polyshot™ - 83387 |
| -65°F to 300°F (-54°C to 150°C) | 40 lb. carton pellets - 83343 | 25 lb. pail Polyshot™ - 83344 | | | |
| -65°F to 250°F (-54°C to 121°C) | 300 ml cartridge - 31291 | 5 gal. pail - 31279 | | | |
| -40°F to 200°F (-40°C to 93°C) | 300 ml cartridge - 41380 | | | | |
| -65°F to 350°F (-54°C to 177°C) | 25 ml syringe with manual plunger - 1057673 | Liter - 1057674 | 10 liter pail - 1062124 | 25 ml EFD syringe w/o manual plunger - 1256398 | |
| 65°F to 300°F (-54°C to 150°C) | 25 ml syringe with manual plunger - 39205 | 50 ml tube - 39250 | 300 ml cartridge - 39275 | 1 liter bottle - 39280 | 15 liter pail - 17505 |
| -65°F to 300°F (-54°C to 149°C) | 40 ml dual cartridge - 1256501 | Resin - 2 liter pail - 1256502*<br>Hardener - 2 liter pail - 1255708* | 4 liter kit - 1256488 | Hardener - 19 liter pail - 1255709 | |
| -65°F to 300°F (-54°C to 155°C) | Dual cartridge - 1250146+1250147 | 40 ml dual cartridge - 1256506 | Resin - 2 liter pail - 1255702*<br>Hardener - 2 liter pail - 1256503* | | |
| -65°F to 300°F (-54°C to 155°C) | 2 x 30 ml syringes - 1087985 | Resin - 1 liter pail - 1087986*<br>Hardener - 1 liter pail - 1087988* | Resin - 10 liter pail - 1087988*<br>Hardener - 10 liter pail - 1088035* | | |
| -65°F to 300°F (-54°C to 150°C) | 30 ml EFD syringe - 29339 | 300 ml cartridge - 29340 | 5 gal. pail - 29341 | | |
| -65°F to 300°F (-54°C to 150°C) | 31 ml EFD syringe - 1078250 | 1 liter bottle - 1078261 | 5 gal. pail - 1078499 | | |

** - Made to order item.*
*Contact your local sales rep.*

# ELECTRIC MOTOR
## product selector

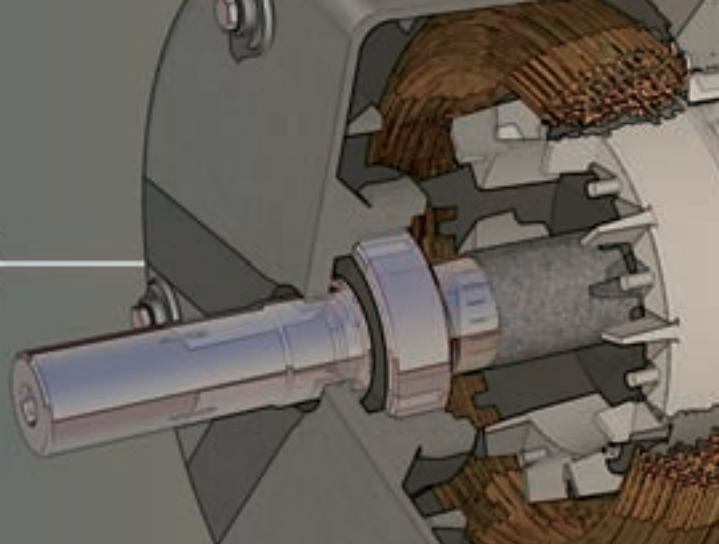

| | CHEMISTRY | TYPICAL USE | PRODUCT NAME | # OF COMP. | CURE METHOD | COLOR | VISCOSITY (cP) | FIXTURE TIME |
|---|---|---|---|---|---|---|---|---|
| GASKETING | ANAEROBICS | Flexible | 509™ Gasket Eliminator® | 1 | Anaerobic | Blue | 65,000 | Unprimed - 6 hrs. / Primed -1 hr. |
| | | High Temperature | 510™ Gasket Eliminator® | 1 | Anaerobic | Red | 188,000 | Unprimed - 4 hrs. / Primed -30 min. |
| | | General-Purpose | 518™ Gasket Eliminator® | 1 | Anaerobic | Red | 800,000 | Unprimed - 4 hrs. / Primed - 30 min. |
| | | Extended Open Time | 573™ Flange Sealant | 1 | Anaerobic | Green | 19,000 | Unprimed - 6 hrs. / Primed -1 hr. |
| | | Fast Cure | 574™ Flange Sealant | 1 | Anaerobic | Orange | 30,000 | Unprimed -1 hr. / Primed -15 min. |
| | SILICONE, RTV | High Performance | 5699™ | 1 | Humidity | Grey | 250 g/min. | 30 min. |
| | | Instant Seal | 5900™ | 1 | Humidity | Black | 35 g/min. | 20 min. |
| | | General-Purpose | 5910™ | 1 | Humidity | Black | 600 g/min. | 20 min. |
| | | High Temperature | 5920™ | 1 | Humidity | Copper | 300 g/min. | 60 min. |
| | SILICONE, LIGHT CURE | Dual Cure | 5039™ Nuva-Sil® | 1 | UV/Humidity | Translucent/Colorless/ Fluorescent | 222 g/min. | 30 sec. @ 120 mW/cm² |
| | | General-Purpose | 5050™ Fastgasket® | 1 | UV | Translucent | 500 g/min. | 30 sec.@ 120 mW/cm² |
| | | Fast Cure/Black | 5950™ Fastgasket® | 1 | UV/Humidity | Black | 350 g/min. | 30 sec. @ 120 mW/cm² |
| | | Fast Cure/Clear | 5951™ Fastgasket® | 1 | UV/Humidity | Clear | 350 g/min. | 30 sec. @ 120 mW/cm² |
| | SILICONE, HEAT CURE | High Durometer | 5963™ Procure™ | 1 | Oven Heat | Grey | 250 g/min. | 10 min. @ 150°C |
| | | General-Purpose | 5964 Procure™ | 1 | Oven Heat | Brown | 120 g/min. | 10 min. @ 150°C |
| POTTING (CONT'D. NEXT PAGE) | ACRYLICS | Multi-Cure | 3101™ | 1 | UV/Heat/Activator | Slightly Hazy / Straw | 6,000 | 5 sec. |
| | | UV + Activator | 366™ | 1 | UV/Activator | Clear / Light Amber | 7,500 | 5 sec. |
| | POLYURETHANES | Very Fast | 3364™ Hysol® | 2 | Two-Part (1:2) | Black | 12,500 | 5 min. |
| | | Fast Cure | 3173™ / 3182™ Hysol® | 2 | Two-Part (1:5.2) | Black | 5,500 | 7 min. |
| | | General-Purpose | 3173™ / 3183™ Hysol® | 2 | Two-Part (1:3) | Opaque Black | 450 | 20 to 40 min. |
| | | UL 94 V-0 | 3173™ / 3184™ Hysol® | 2 | Two-Part (1:4.8) | Opaque White | 2,250 | 45 min. |
| | EPOXY – ONE-PART | UV Initiation | 3335™ | 1 | UV/Oven | Hazy White | 5,000 | UV or 15 min. @ 150°C |
| | | General-Purpose | 3981™ Hysol® | 1 | Oven | Transparent White | 5,300 | 35 min. @ 100°C / 16 min. at 150°C |
| | | Medium Viscosity | 3982™ Hysol® | 1 | Oven | Off-White | 8,000 | 25 min. @ 100°C / 17 min. at 150°C |
| | | High Viscosity | 3985™ Hysol® | 1 | Oven | Black | 47,500 | 45 min. @ 100°C / 30 min. at 150°C |
| | EPOXY – TWO-PART | UV Dual Cure | 193124 / 193125 | 2 | UV/Two-Part (2:1) | Transparent / Straw | 7,000 | 60 sec. UV |
| | | General-Purpose | E-60NC Hysol® | 2 | Two-Part (2:1) | Black | 10,000 | 60 min. |
| | | UL 1446 & UL 94HB | 3140™ / 3164™ Hysol® | 2 | Two-Part (2:1) | Black | 1,500 | 25 to 35 min. |
| | | UL 94V-0 | 3145™ / 3162™ Hysol® | 2 | Two-Part (2:1) | Black | 7,150 | 35 to 45 min. |
| | | UL674 | E-40EXP™ Hysol® | 2 | Two-Part (4:1) | Grey | 16,500 | 120 min. |

| CURE-THROUGH DEPTH, IN. | TEMP. RANGE | PACKAGE SIZE – PART NUMBER | | | |
|---|---|---|---|---|---|
| Unprimed - 0.01/Primed - 0.02 | -65°F to 300°F (-54°C to 150°C) | 300 ml cartridge - 21525 | 850 ml cartridge - 50965 | | |
| Unprimed - 0.01/Primed - 0.02 | -65°F to 400°F (-54°C to 204°C) | 50 ml tube - 51031 | 250 ml tube - 51041 | 300 ml cartridge - 51074 | |
| Unprimed - 0.01/Primed - 0.02 | -65°F to 300°F (-54°C to 150°C) | 6 cc carded tube - 51817 | 50 ml tube - 51831 | 300 ml cartridge - 51845 | |
| Unprimed - 0.01/Primed - 0.02 | -65°F to 300°F (-54°C to 150°C) | 250 ml tube - 16392 | | | |
| Unprimed - 0.01/Primed - 0.02 | -65°F to 300°F (-54°C to 150°C) | 50 ml tube - 24801 | 250 ml tube - 26338 | 300 ml cartridge - 41013 | |
| 0.236 | -65°F to 400°F (-54°C to 200°C) | 300 ml cartridge - 18581 | 50 lb. pail - 18582 | 550 lb. drum - 18583 | |
| 0.236 | -65°F to 500°F (-54°C to 260°C) | 300 ml Fischbach® cartridge with threaded tip - 20166 | 50 lb. pail - 20167 | 550 lb. drum - 20168 | |
| 0.236 | -65°F to 500°F (-54°C to 260°C) | 300 ml Fischbach® cartridge with threaded tip - 21746 | 50 lb. pail - 21747 | 550 lb. drum - 21748 | |
| 0.236 | -65°F to 700°F (-54°C to 370°C) | 300 ml cartridge - 82046 | 70 ml tube - 30542 | 40 lb. pail - 21472 | |
| 0.236 | -65°F to 350°F (-54°C to 177°C) | 300 ml cartridge - 40438 | 40 lb. pail - 40439 | | |
| 0.236 | -65°F to 350°F (-54°C to 177°C) | 300 ml cartridge - 1212166 | 40 lb. pail - 1212165 | | |
| 0.236 | -65°F to 350°F (-54°C to 177°C) | 300 ml Fischbach® cartridge - 29287 | 40 lb. pail - 18495 | | |
| 0.236 | -65°F to 350°F (-54°C to 177°C) | 40 lb. pail - 18198 | | | |
| 0.236 | -65°F to 400°F (-54°C to 204°C) | 50 lb. pail - 34337 | | | |
| 0.236 | -65°F to 400°F (-54°C to 204°C) | 300 ml cartridge - 34348 | 50 lb pail - 34347 | | |
| 0.394 | -65°F to 300°F (-54°C to 148°C) | 25 ml syringe - 19861 | 1 liter bottle - 19860 | | |
| 0.079 | -65°F to 230°F (-54°C to 110°C) | 50 ml bottle - 36631 | 1 liter bottle - 12224 | | |
| 0.492 | -65°F to 300°F (-54°C to 150°C) | 50 ml dual cartridge - 1166733 | | | |
| 0.492 | -65°F to 300°F (-54°C to 150°C) | Resin - 1 qt. can - 39984<br>Hardener - 1 gal. can -39995 | Resin - 1 gal. can - 39985<br>Hardener - 5 gal. pail - 39996 | Resin - 5 gal. pail - 39986<br>Hardener - 55 gal. drum - 39997 | |
| 0.492 | 65°F to 300°F (-54°C to 150°C) | Resin - 1 qt. can - 39984<br>Hardener - 1 gal. can -39998 | Resin - 1 gal. can - 39985<br>Hardener - 5 gal. pail - 39999 | Resin - 5 gal. pail - 39986<br>Hardener - 55 gal. drum - 39399 | |
| 0.492 | -65°F to 300°F (-54°C to 150°C) | Resin - 1 qt. can - 39984<br>Hardener - 1 gal. can -39398 | Resin - 1 gal. can - 39985<br>Hardener - 5 gal pail - 39397 | Resin - 5 gal. pail - 39986 | |
| 0.08 (UV) / 0.5 (Heat) | -65°F to 350°F (-54°C to 176°C) | 25 ml syringe - 30288 | 1 liter bottle - 30289 | | |
| >0.5 | -65°F to 300°F (-54°C to 150°C) | 5 ml syringe - 39039 | 30 ml EFD syringe - 36766 | 1 liter bottle - 32797 | 5 gal. pail - 37297* |
| >0.5 | -65°F to 300°F (-54°C to 150°C) | 30 ml EFD syringe - 36767 | 1 liter bottle - 36798 | 5 gal. pail - 36772* | |
| >0.5 | -65°F to 399°F (-54°C to 204°C) | 1 liter bottle - 40870 | 5 gal. pail - 34731 | 50 lb. pail - 919449* | |
| >0.5 | -65°F to 350°F (-54°C to 176°C) | Resin - 5 gal. pail - 777700<br>Hardener - 5 gal. pail - 777701 | | | |
| >0.5 | -65°F to 300°F (-54°C to 150°C) | 50 ml dual cartridge - 29324 | 200 ml dual cartridge - 29325 | 400 ml dual cartridge - 29326 | Resin - 5 gal. pail - 29327<br>Hardener - 5 gal. pail - 29328 |
| >0.5 | -65°F to 300°F (-54°C to 150°C) | Resin - 1 gal. can - 39944<br>Hardener - 1 gal. can - 39969 | Resin - 5 gal. pail - 39945<br>Hardener - 5 gal. pail - 39970 | | |
| >0.5 | -65°F to 300°F (-54°C to 150°C) | Resin - 13 lb. can - 40512<br>Hardener - 1 qt. can - 39960 | Resin - 65 lb. pail - 40511 | Resin - 65 lb. pail - 40511<br>Hardener - 5 gal. pail - 39962 | |
| >0.5 | -65°F to 300°F (-54°C to 150°C) | | | | |

** - Made to order item.*
*Contact your local sales rep.*

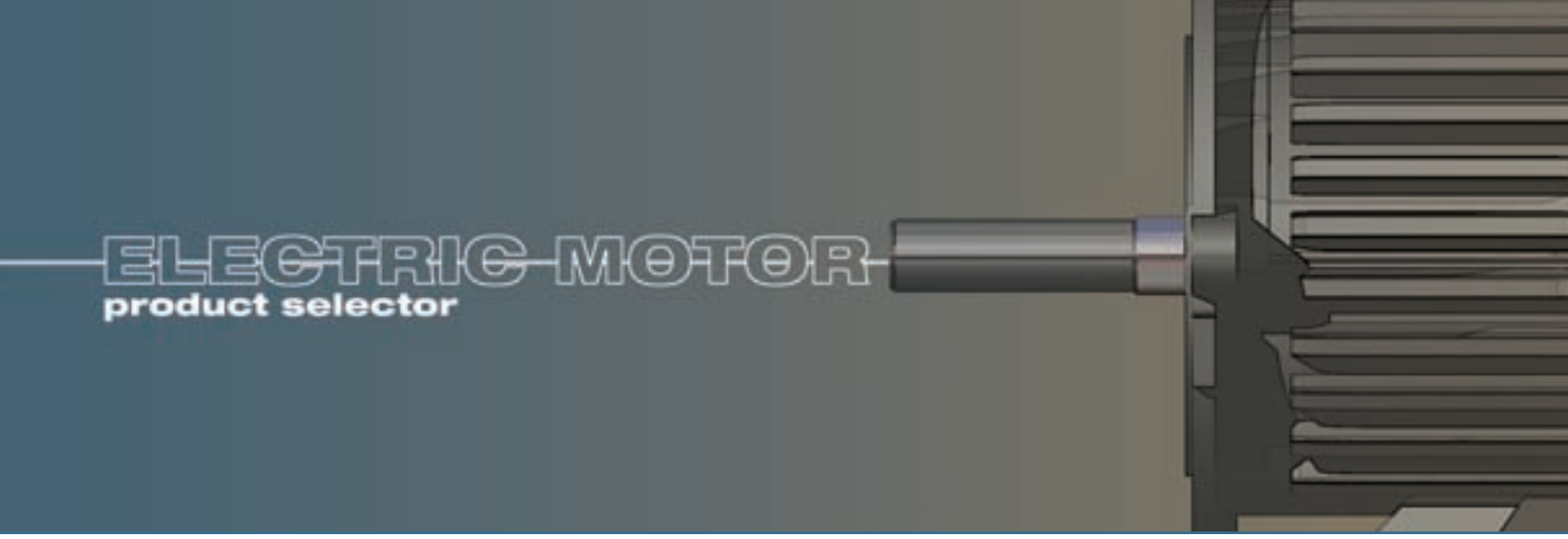


| | CHEMISTRY | TYPICAL USE | PRODUCT NAME | # OF COMP. | CURE METHOD | COLOR | VISCOSITY (cP) | FIXTURE TIME | CURE-THROUGH DEPTH, IN. |
|---|---|---|---|---|---|---|---|---|---|
| POTTING (CONT'D.) | SILICONES – LIGHT CURE | Dual Cure | 5240™ Nuva-Sil® | 1 | UV/Humidity | Clear | 18,000 | 60 sec. @ 70 mW/cm² | 0.787 |
| | | Flowable | 5055™ | 1 | UV | Clear | 525 | 60 sec. @ 70 mW/cm² | 0.236 |
| | | High Adhesion | 5056™ | 1 | UV | Clear | 2,200 | 60 sec. @ 70 mW/cm² | 0.236 |
| | SILICONES – TWO-PART | Fast Cure | 5620™ | 2 | Two-Part (1:1) | Clear | 200 | 24 hrs. or 1 hr. @ 100°C | >0.5 |
| | | Tack-Free Gel | 5623™ | 2 | Two-Part (1:1) | Clear | 700 | 30 min. or 1 hr. @ 100°C | >0.5 |
| | | Soft Gel | 5625™ | 2 | Two-Part (1:1) | Clear | 1,500 | 24 hrs. or 1 hr. @ 100°C | >0.5 |
| | | Fast, UL 94V0 | 5611™ F | 2 | Two-Part (10:1) | Grey | 4,500 | 10 min. - 7 days full cure | >0.5 |
| | | Slow, UL 94V0 | 5611™ S | 2 | Two-Part (10:1) | Grey | 5,000 | 70 min. | >0.5 |
| RETAINING | ANAEROBICS | Wicking Grade | 290™ | 1 | Anaerobic | Green | 12 | 30 min. | 0.006 |
| | | General-Purpose | 603™ | 1 | Anaerobic | Green | 125 | Unprimed - 10 min./ Primed -1 min. | 0.005 |
| | | High Temperature | 620™ | 1 | Anaerobic | Green | 8,500 | Unprimed - 30 min./ Primed -1 min. | 0.015 |
| | | High Strength | 638™ | 1 | Anaerobic | Green | 2,500 | Unprimed - 5 min./ Primed -1 min. | 0.015 |
| | | Fast Cure | 648™ | 1 | Anaerobic | Green | 500 | Unprimed - 5 min./ Primed -1 min. | 0.006 |
| | | Light Cure | 661™ | 1 | Light/Anaerobic | Amber | 500 | 30 sec. | 0.006 |
| | | Semisolid Stick | QuickStix™ 668™ | 1 | Anaerobic | Green | Semisolid | 90 sec. | 0.004 |
| TACKING | ACRYLIC – LIGHT CURE | Activator Cure | 3526™ | 1 | UV/Visible Light/ Oven | Clear/Pale Straw/ Fluorescent | 17,800 | 30 sec. | >0.5 |
| | | High Adhesion to Plastics | 3926™ | 1 | Light | Transparent to Hazy/Fluorescent | 4,500 | 60 sec. | >0.5 |
| | | High Adhesion to Metals | 3944™ | 1 | Light | Fluorescent/Pale Yellow | 5,000 | 30 sec. | 0.551 |
| | | General-Purpose – Medium cPs | 3971™ | 1 | Light | Transparent to Hazy/Fluorescent | 320 | 30 sec. | >0.5 |
| | | General-Purpose – Low cPs | 3972™ | 1 | Light | Transparent to Hazy/Fluorescent | 4,500 | 30 sec. | >0.5 |
| | CYANOACRYLATES | Low cPs – Thermally Resistant | 4203™ | 1 | Humidity | Clear | 375 | 30 sec. | 0.004 |
| | | Medium cPs – Thermally Resistant | 4204™ | 1 | Humidity | Clear | 4,000 | 30 sec. | 0.008 |
| | | Gel – Thermally Resistant | 4205™ | 1 | Humidity | Clear | Gel | 30 sec. | 0.012 |
| | | Medium cPs – UV Cure | 4311™ Flashcure® | 1 | Light/Humidity | Clear/Pale Green/ Fluorescent | 900 | 5 sec. | 0.008 |
| | HOT MELTS | Long Open Time | 0450™ Hysol® SprayPac® | 1 | Cooling | Natural | 4,500 | 5 to 8 min. | 0.236 |
| | | High Adhesion to Metals | 3631™ Hysol® | 1 | Cooling/Humidity | Off-White | 12,000 | 60 sec. | 0.236 |
| | | General-Purpose | 7804FRM-HV™ Hysol® | 1 | Cooling | Amber | 6,000 | 35 sec. | 0.236 |
| | | High Temperature | 7901™ Hysol® | 1 | Cooling | Amber | 750 | 35 sec. | 0.236 |

| | TEMPERATURE RANGE | PACKAGE SIZE – PART NUMBER | | | | |
|---|---|---|---|---|---|---|
| | -65°F to 350°F (-54°C to 177°C) | 25 ml syringe - 1010341 | 300 ml cartridge - 1010320 | 40 lb. pail - 1010343* | 190 kg drum - 1342966 | |
| | -65°F to 350°F (-54°C to 177°C) | 25 ml syringe - 1212167 | 1 liter bottle - 1214246 | 15 liter pail - 1214247 | | |
| | -65°F to 350°F (-54°C to 177°C) | 25 ml syringe - 1214249 | 1 liter bottle - 1214250 | 15 liter pail - 1214248 | | |
| | -65°F to 300°F (-40°C to 150°C) | 50 ml dual cartridge - 1257593 | 400 ml dual cartridge - 1257478 | Resin - 40 lb. pail - 1257595<br>Hardener - 40 lb. pail - 1257597 | Resin - 400 lb. drum - 1257594<br>Hardener - 400 lb. drum - 1257596 | |
| | -65°F to 300°F (-40°C to 150°C) | 400 ml dual cartridge - 1259300 | Resin - 40 lb. pail - 1257611<br>Hardener - 40 lb. pail - 1257607 | Resin - 400 lb. drum - 1257612<br>Hardener - 400 lb. drum - 1257609 | | |
| | -65°F to 300°F (-40°C to 150°C) | 400 ml dual cartridge - 1257475 | Resin - 40 lb. pail - 1257616<br>Hardener - 40 lb. pail - 1257613 | Resin - 400 lb. drum - 1257617<br>Hardener - 400 lb. drum - 1257615 | | |
| | -65°F to 300°F (-40°C to 150°C) | 490 ml dual cartridge - 1385991 | Resin - 4.5 gal. pail - 1387908<br>Hardener - 4.5 gal. pail - 1387706 | Resin - 575 lb. drum - 1386373<br>Hardener - 440 lb. drum - 1432213 | | |
| | -65°F to 300°F (-40°C to 150°C) | 490 ml dual cartridge - 1386378 | Resin - 4.5 gal. pail - 1387908<br>Hardener - 4.5 gal. pail - 1388496 | Resin - 575 lb. drum - 1386373<br>Hardener - 440 lb. drum - 1387212 | | |
| | -65°F to 300°F (-54°C to 150°C) | 0.5 ml capsule - 29005 | 10 ml bottle - 29021 | 50 ml bottle - 29031 | 250 ml bottle - 29041 | 1 liter bottle - 29043 |
| | -65°F to 300°F (-54°C to 150°C) | 10 ml bottle - 21440 | 50 ml bottle - 21441 | 250 ml bottle - 21442 | 1 liter bottle - 31680 | |
| | -65°F to 450°F (-54°C to 232°C) | 0.5 ml capsule - 62005 | 5 ml bottle - 1012623 | 10 ml bottle - 62040 | 50 ml bottle - 62040 | 250 ml bottle - 62070 |
| | -65°F to 300°F (-54°C to 150°C) | 10 ml bottle - 21447 | 50 ml bottle - 21448 | 250 ml bottle - 21449 | 1 liter bottle - 996451 | |
| | -65°F to 350°F (-54°C to 177°C) | 6 ml tube - 33325 | 10 ml bottle - 21443 | 50 ml bottle - 21444 | 250 ml bottle - 21445 | 1 liter bottle - 21446 |
| | -65°F to 350°F (-54°C to 177°C) | 250 cc bottle - 66141* | 1 liter bottle - 66170* | | | |
| | -65°F to 400°F (-54°C to 204°C) | 19 g stick - 39148 | | | | |
| | -65°F to 250°F (-54°C to 121°C) | 25 ml syringe - 30756 | 1 liter bottle - 30764 | | | |
| | -65°F to 212°F (-54°C to 100°C) | 25 ml EFD syringe - 36492 | 1 liter bottle - 36493 | 15 liter pail - 36494 | | |
| | -65°F to 300°F (-54°C to 150°C) | 25 ml EFD syringe - 38210 | 1 liter bottle - 38211 | 15 liter pail - 38212 | | |
| | -65°F to 300°F (-54°C to 150°C) | 25 ml EFD syringe - 36792 | 1 liter bottle - 36805 | 15 liter pail - 1057609 | | |
| | -65°F to 300°F (-54°C to 150°C) | 25 ml EFD syringe - 36294 | 1 liter bottle - 36295 | 15 liter pail - 36296 | | |
| | -65°F to 250°F (-54°C to 121°C) | 1 oz. bottle - 1376970 | 1 lb. bottle - 28027 | | | |
| | -65°F to 250°F (-54°C to 121°C) | 3 g tube - 26839 | 1 oz. bottle - 1376969 | 1 lb. bottle - 26325 | | |
| | -65°F to 250°F (-54°C to 121°C) | 20 g tube - 28028 | 200 g tube - 28029 | 300 g cartridge - 28030 | | |
| | -65°F to 240°F (-54°C to 115°C) | 1 oz. bottle - 14001791 | 1 lb. bottle - 1401789 | | | |
| | -65°F to 155°F (-54°C to 69°C) | 12 oz. bag Polyshot™ - 83353 | 35 lb. carton Polyshot™ - 83354 | 12 oz. bag (red) Polyshot™ - 83355 | 35 lb. carton (red) Polyshot™ - 83356 | |
| | -65°F to 250°F (-54°C to 121°C) | 300 ml cartridge - 31291 | 5 gal. pail - 31279 | | | |
| | -65°F to 230°F (-54°C to 110°C) | 13 oz. bag Polyshot™ - 83386 | 40 lb. carton pellets - 83382 | 5 oz. bag, 10 in. superstick - 83383 | 30 lb. pail, 10 in. superstick - 83384 | 25 lb. pail Polyshot™ - 83387 |
| | -65°F to 300°F (-54°C to 150°C) | 40 lb. carton pellets - 83343 | 25 lb. pail Polyshot™ - 83344 | | | |

** - Made to order item.*
*Contact your local sales rep.*

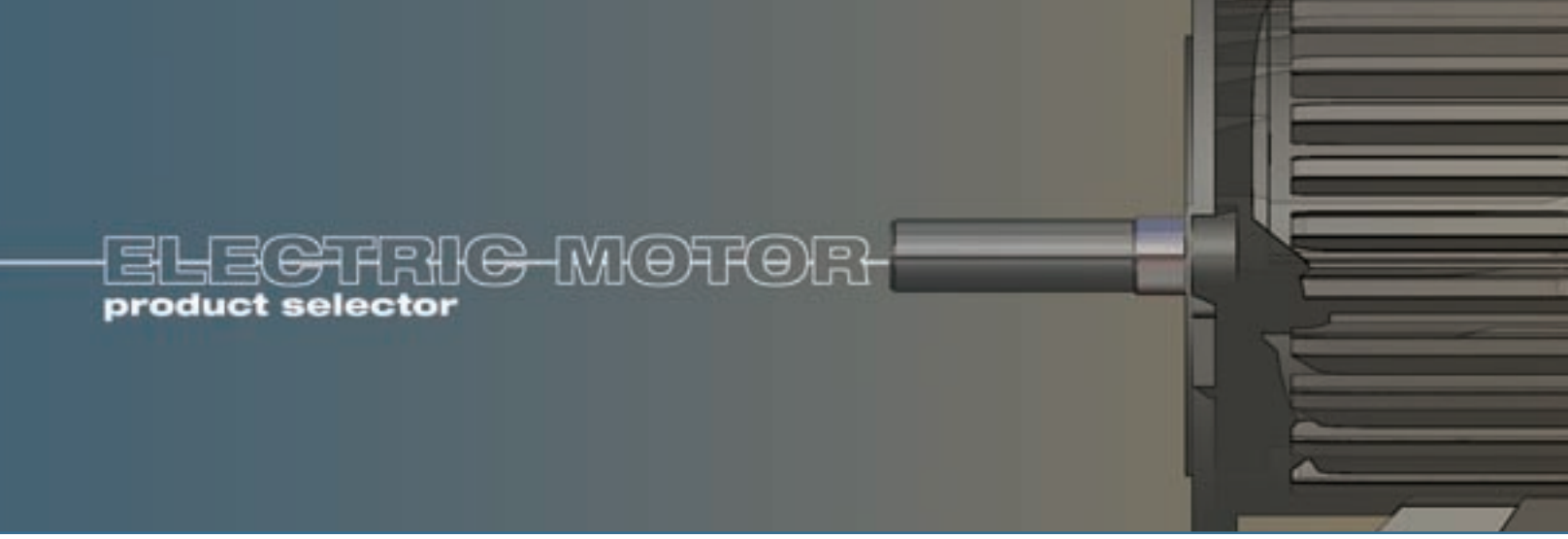

# ELECTRIC MOTOR
## product selector

| | CHEMISTRY | TYPICAL USE | PRODUCT NAME | # OF COMP. | CURE METHOD | COLOR | VISCOSITY (cP) | FIXTURE TIME | CURE THROUGH DEPTH, IN. |
|---|---|---|---|---|---|---|---|---|---|
| THREADLOCKING | ANAEROBICS | Low Strength | 222™ | 1 | Anaerobic | Puple | 1,200/5,000 Thixotropic | 10 min. | N/A |
| | | General-Purpose | 243™ | 1 | Anaerobic | Blue | 2,250/12,000 Thixotropic | 5 min. | N/A |
| | | High Temperature | 2422™ | 1 | Anaerobic | Blue | Paste | 90 min. | N/A |
| | | General-Purpose | QuickStix™ 248™ | 1 | Anaerobic | Blue | Semisolid | Unprimed - 10 min. / Primed -3 min. | N/A |
| | | High Strength, Fast Set | 263™ | 1 | Anaerobic | Red | 500 | 15 min. | N/A |
| | | High Strength | QuickStix™ 268™ | 1 | Anaerobic | Red | Semisolid | Unprimed - 20 min. / Primed -5 min. | N/A |
| | | Wicking Grade | 290™ | 1 | Anaerobic | Green | 12 | 6 min. | N/A |
| | CYANOACRYLATES | For Plastics | 425™ Assure™ | 1 | Humidity | Blue | 80 | 1.5 hrs. | NA |
| THREAD SEALING | ANAEROBICS | Hydraulic/Pneumatic | 545™ | 1 | Anaerobic | Purple | 14,000 | 4 hrs. | N/A |
| | | Refrigerant | 554™ | 1 | Anaerobic | Red | 2,500 | 4 hrs. | N/A |
| | | General-Purpose | QuickStix™ 561™ PST® | 1 | Anaerobic | White | Paste | 4 hrs. | N/A |
| | | General-Purpose | 565™ PST® | 1 | Anaerobic | White | 300,000 | 4 hrs. | N/A |
| | | High Temperature | 567™ | 1 | Anaerobic | White | 540,000 | 4 hrs. | N/A |
| | | Stainless Steel | QuickStix™ 5671™ PST® | 1 | Anaerobic | Off-White | Paste | 4 hrs. | N/A |
| | | Slow Cure | 592™ PST® | 1 | Anaerobic | White | 250,000 | 4 hrs. | N/A |
| | NONREACTIVE | No-Drip | 55™ Pipe Sealing Cord | 1 | No Cure | White | String | Instant | N/A |
| | | Oxygen Systems | Thread Sealant for Oxygen Systems | 1 | Dry | White | Paste | Instant | N/A |
| | | Plastic Pipes | No More Leaks™ – Solvent-Based | 1 | Solvent Evaporation | White | Paste | Instant | N/A |
| WIRE REINFORCEMENT | EPOXIES | One-Part, General-Purpose | 3985™ Hysol® | 1 | Oven | Black | 47,500 | 45 min. @ 120°C/ 30 min. @ 150°C | >0.5 |
| | | Moisture-Resistant | E-05MR™ Hysol® | 2 | Two-Part (1:1) | Clear | 25,000 | 15 min. | >0.5 |
| | | High Impact | E-20HP™ Hysol® | 2 | Two-Part (2:1) | Off-White | 45,000 | 60 min. | >0.5 |
| | | General-Purpose | E-40FL Hysol® | 2 | Two-Part (1:1) | Grey | 70,000 | 120 min. | >0.5 |

| | TEMPERATURE RANGE | PACKAGE SIZE – PART NUMBER | | | | |
|---|---|---|---|---|---|---|
| | -65°F to 300°F (-54°C to 150°C) | 10 ml bottle - 21463 | 50 ml bottle - 21464 | | | |
| | -65°F to 300°F (-54°C to 150°C) | 0.5 ml capsule - 1330255 | 10 ml soft squeeze bottle - 1329837 | 50 ml bottle - 1329467 | 250 ml bottle - 1329505 | 1 liter bottle - 133033 |
| | -65°F to 650°F (-54°C to 343°C) | 30 g syringe with manual plunger - 1134601 | 300 g cartridge - 1134602 | | | |
| | -65°F to 300°F (-54°C to 150°C) | 9 g stick - 37684 | 19 g stick - 37087 | | | |
| | -65°F to 300°F (-54°C to 150°C) | 0.5 ml capsule - 1330582 | 10 ml soft squeeze bottle - 1330583 | 50 ml bottle - 1330585 | 250 ml bottle - 1330335 | 1 liter bottle - 1330334 |
| | -65°F to 300°F (-54°C to 150°C) | 9 g stick - 37685 | 19 g stick - 37686PR | | | |
| | -65°F to 300°F (-54°C to 150°C) | 0.5 ml capsule - 29005 | 10 ml bottle - 29021 | 50 ml bottle - 29031 | 50 ml bottle - 29041 | 1 liter bottle - 29043 |
| | -65°F to 180°F (-54°C to 82°C) | 1 oz. bottle - 42540 | 1 lb. bottle - 42561 | | | |
| | -65°F to 300°F (-54°C to 150°C) | 0.5 ml sample capsule - 54505 | 10 ml bottle - 32429 | 50 ml bottle - 54531 | 250 ml bottle - 54541 | 1 liter bottle - 54543 |
| | -65°F to 300°F (-54°C to 150°C) | 10 ml bottle - 25882 | 250 ml bottle - 55441 | | | |
| | -65°F to 300°F (-54°C to 150°C) | 19 g stick - 37127 | | | | |
| | -65°F to 300°F (-54°C to 150°C) | 6 ml tube - 56507 | 50 ml tube - 56531 | 250 ml tube - 56541 | 1 liter bottle - 56543 | 350 ml brush-top bottle - 35531 |
| | 65°F to 400°F (-54°C to 204°C) | 6 ml tube - 56707 | 50 ml tube - 56747 | 250 ml tube - 56765 | 1 liter bottle - 56790* | 350 cc can with brush cap - 33241 |
| | -65°F to 300°F (-54°C to 150°C) | 19 g stick - 1276167 | | | | |
| | -65°F to 400°F (-54°C to 204°C) | 6 ml tube - 59214 | 50 ml tube - 59231 | 250 ml tube - 59241 | 1 liter bottle - 59243 | |
| | -65°F to 300°F (-54°C to 150°C) | 150 m (5,700 in.) - 35082 | | | | |
| | -65°F to 140°F (-54°C to 60°C) | 50 ml tube - 1265761 | | | | |
| | -65°F to 400°F (-54°C to 204°C) | 2 oz. tube - 80725 | 7 oz. tube - 80724 | 1 pint brush top can - 80726 | | |
| | -65°F to 400°F (-54°C to 204°C) | 1 liter bottle - 40870 | 5 gal. pail - 34731 | 50 lb. pail - 919449* | | |
| | -65°F to 400°F (-54°C to 204°C) | 25 ml syringe with manual plunger - 1087601 | 50 ml dual cartridge - 1086598 | 200 ml dual cartridge - 1086600* | 400 ml dual cartridge - 1086599* | Resin - 5 gal. pail - 1087602*<br>Hardener - 5 gal. pail - 1087603* |
| | -65°F to 400°F (-54°C to 204°C) | 50 ml dual cartridge - 29314 | 200 ml dual cartridge - 29315 | 400 ml dual cartridge - 29316 | Resin - 5 gal. pail - 29317*<br>Hardener - 5 gal. pail - 29318* | |
| | -65°F to 400°F (-54°C to 204°C) | 50 ml dual cartridge - 29304 | 200 ml dual cartridge - 29305 | 400 ml dual cartridge - 29306 | | |

** - Made to order item.*
*Contact your local sales rep.*

# Henkel – Your partner worldwide


**Henkel Corporation**
**Engineering Adhesives**
One Henkel Way
Rocky Hill, Connecticut 06067
Tel: 1.800.LOCTITE (562.8483)
Tel: 860.571.5100
Fax: 1.860.571.5465

**Henkel Canada Corporation**
2225 Meadowpine Blvd.
Mississauga, Ontario L5N 7P2
Tel: 1.800.263.5043 (within Canada)
Tel: 905.814.6511
Fax: 905.814.6522

**Henkel Capital, S.A. de C.V.**
Blvd. Magnocentro No. 8 Piso 2
Centro Urbano Interlomas
52760 Huixquilucan,
Edo. de México
Tel: 01.800.90.181.00 (within Mexico)
Tel: +52.55.3300.3644
Fax: +52.55.5787.9404

**Henkel Corporation**
**Engineering Adhesives**
**One Henkel Way**
**Rocky Hill, Connecticut 06067**
**U.S.A.**
**www.henkelna.com/electricmotors**
**www.loctite.com**



Except as otherwise noted, all marks used are trademarks and/or registered trademarks of Henkel and/or its affiliates in the U.S. and elsewhere. ® = registered in the U.S. Patent and Trademark Office. Fischbach is a registered trademark of Fischbach KG Kunstoff-Technik. UL is a registered trademark of Underwriters Laboratories. © Henkel Corporation, 2010. All rights reserved. 6664/LT-4320 (7/10)